# National Grid SA-CO

# PRODUCTION FILE

| | | |
|---|---|---|
| Contractor | : | ABB Contracting Co. |
| Project | : | SS 8709- 132/13.8kV in Alkha |
| Contract No | : | 11131113/00 |
| Substation | : | 8709 |
| Subject | : | 132Kv Busbar Protection Set-<br>Relay Panel-5 |

ABB

POWER SYSTEMS NETWORK MANAGEMENT
PROTECTION AND SUBSTATION AUTOMATION SYSTEMS
WBS NO: S-13656

ABB AUTOMATION COMPANY LTD.
414, AL-KHARJ ROAD
SECOND INDUSTRIAL CITY
RIYADH-11383 K.S.A

CONTRACTOR : ABB Contracting Company

CLIENT : National GridSA

PROJECT : CONSTRUCTION OF NEW 132/13.8kV SS 8709 IN AL-KHARJ CITY

SUBSTATION : S/S 8709

CONTRACT NO. : 11131113/00

TITLE : Assembly Drawing - +BBP2-5
[132KV BUSBAR PROTECTION MAIN-2 BAY UNIT PANEL]

THIS DRAWING AND THE INFORMATION CONTAINED HEREIN ARE THE SOLE PROPERTY OF NationalGrid SA NO REPRODUCTION IN FULL OR IN PART SHALL BE OBTAINED FROM THIS DOCUMENT WITHOUT THE WRITTEN CONSENT OF ITS OWNER.

AS-BUILT BY _____ DATE _____ | CONTRACT NO. 11131113/00 | JOB ORDER NO. S-13656

| REV. NO. | DATE | DESCRIPTION |
|---|---|---|
| 01 | 13 49 | FACTORY ASBUILT |
| 00 | 13 05 | FOR APPROVAL |

DRAWN BY RIZ CHECKED BY KVR
DATE STARTED 30.01.2013 DATE COMPLETED _____
DPRG. DEPT. CTPD ENG. DEPT. AUT-PSAC

COVER SHEET
132KV BUSBAR PROTN.MAIN-2 BU PANEL +BBP2-5
S/S 8709 - 132/13.8KV IN AL-KHARJ CITY
RIYADH SAUDI ARABIA

الشركة الوطنية لنقل الكهرباء
نقل الكهرباء
National Grid SA

| INDEX | PLANT NO. | DRAWING NUMBER | SHEET NO. SHT | SHEET NO. CONT. | REV. NO. |
|---|---|---|---|---|---|
| - | C421 | CD-323008 | G00 | G01 | 01 |

NG/D2-D (2012/01)
DMS VECTOR NGD200

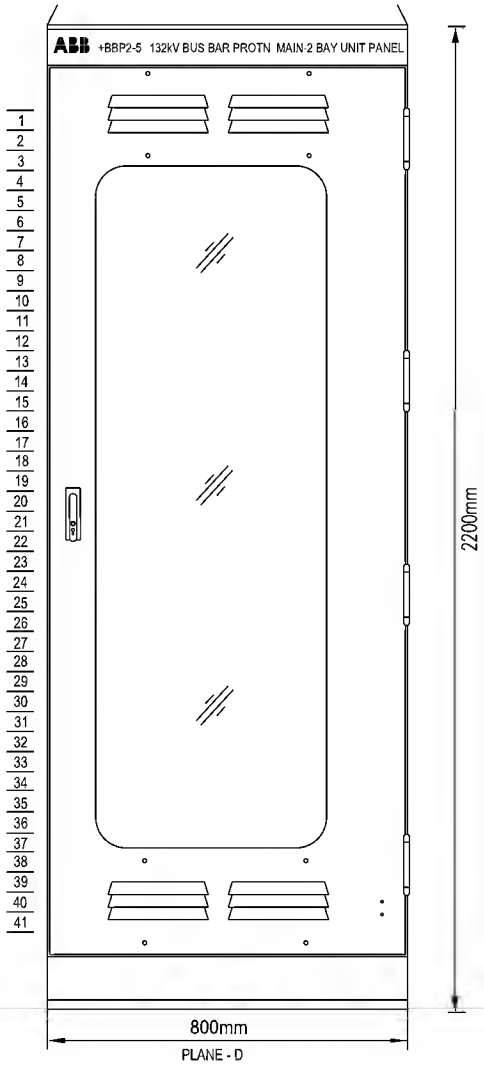


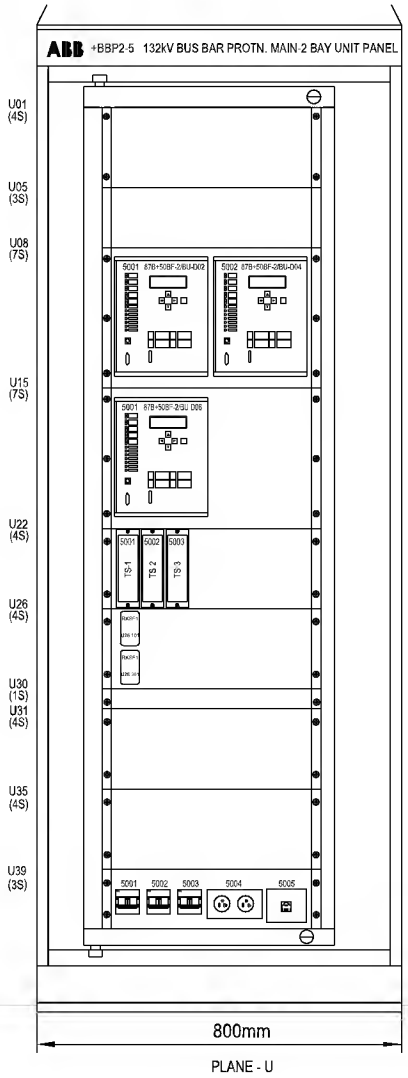


| MOUNTING PLANES | |
|---|---|
| EXTERIOR COLOUR | AIRCRAFT GREY COLOUR TO SHADE NO. RAL7038 |
| INTERIOR COLOUR | SIGNAL WHITE COLOUR TO SHADE NO. RAL9003 |
| CUBICLE TYPE | VSH 200 |
| FRAME | HINGED FRAME, MOVABLE |
| CUBICLE TYPE | FRONT ACCESS |
| MATERIAL OF CONSTRUCTION | ALUZINK STEEL |
| DIMENSIONS | 2200 X 800 X 800 mm (H X W X D) |
| CLASS OF PROTECTION | IP 41 |
| APPROX WEIGHT | 200KG |
| CABLE ENTRY | BOTTOM |

AS-BUILT BY _____ DATE _____ | CONTRACT NO. 11131113/00 | JOB ORDER NO. S-13656

| REV. NO. | DATE | DESCRIPTION |
|---|---|---|
| 01 | 13 49 | FACTORY ASBUILT |
| 00 | 13 05 | FOR APPROVAL |

DRAWN BY RIZ CHECKED BY KVR
DATE STARTED 30.01.2013 DATE COMPLETED _____
DPRG. DEPT. CTPD ENG. DEPT. AUT-PSAC

ASSEMBLY DRAWING
132KV BUSBAR PROTN.MAIN-2 BU PANEL +BBP2-5
S/S 8709 - 132/13.8KV IN AL-KHARJ CITY
RIYADH SAUDI ARABIA

الشركة الوطنية لنقل الكهرباء
نقل الكهرباء
National Grid SA

| INDEX | PLANT NO. | DRAWING NUMBER | SHEET NO. SHT | SHEET NO. CONT. | REV. NO. |
|---|---|---|---|---|---|
| - | C421 | CD-323008 | G01 | G02 | 01 |

NG/D2-D (2012/01)
DMS VECTOR NGD200

THIS DRAWING AND THE INFORMATION CONTAINED HEREIN ARE THE SOLE PROPERTY OF NationalGrid SA NO REPRODUCTION IN FULL OR IN PART SHALL BE OBTAINED FROM THIS DOCUMENT WITHOUT THE WRITTEN CONSENT OF ITS OWNER.

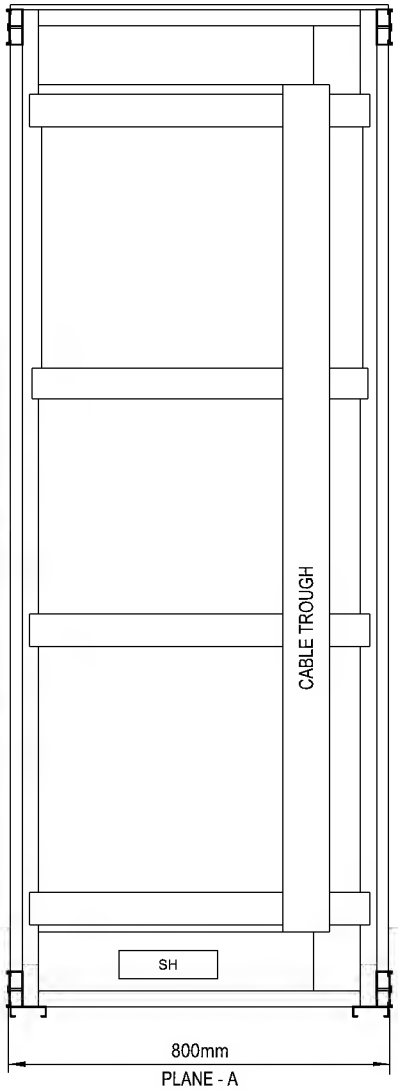


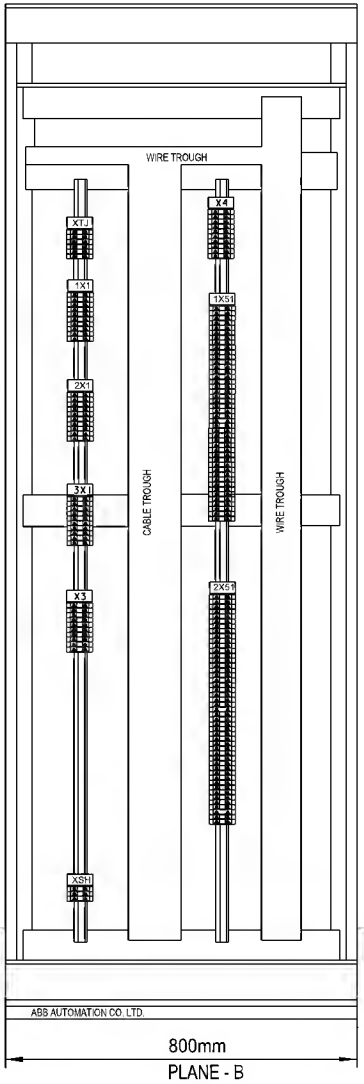


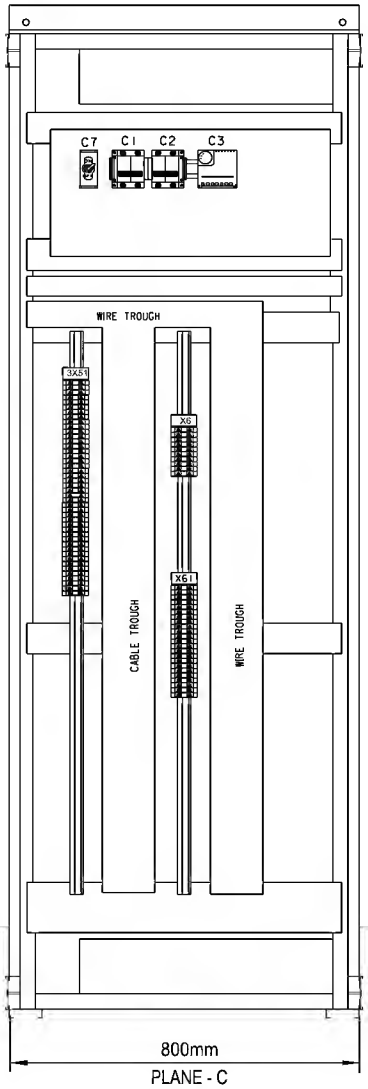


| SCH.REF | DESCRIPTION | TYPE | MAKE |
|---|---|---|---|
| 1X1,2X1,3X1 | CT CIRCUITS | OTTA 6T P/P | PHOENIX |
| | | | |
| X3 | AC INCOMING CIRCUITS | D6/8.ST1.RS | ENTRELEC |
| | | | |
| X4 | DC INCOMING CIRCUITS CIRCUITS | D6/8.ST1.RS | ENTRELEC |
| | | | |
| 1X51,2X51,3X51 | CONTROL CIRCUITS | M6/8.RS | ENTRELEC |
| | | | |
| X61,X6 | ALARM CIRCUITS | M6/8.SNB | ENTRELEC |
| | | | |
| XTJ | TELEPHONE JACK | M6/8.RS | ENTRELEC |
| | | | |
| XSH | SPACE HEATER | M6/8.RS | ENTRELEC |
| | | | |

AS-BUILT BY _____ DATE _____ | CONTRACT NO. 11131113/00 | JOB ORDER NO. S-13656

| REV. NO. | DATE | DESCRIPTION |
|---|---|---|
| 01 | 13 49 | FACTORY ASBUILT |
| 00 | 13 05 | FOR APPROVAL |

DRAWN BY RIZ CHECKED BY KVR
DATE STARTED 30.01.2013 DATE COMPLETED _____
DPRG. DEPT. CTPD ENG. DEPT. AUT-PSAC

ASSEMBLY DRAWING
132KV BUSBAR PROTN.MAIN-2 BU PANEL +BBP2-5
S/S 8709 - 132/13.8KV IN AL-KHARJ CITY
RIYADH SAUDI ARABIA

الشركة الوطنية لنقل الكهرباء
نقل الكهرباء
National Grid SA

| INDEX | PLANT NO. | DRAWING NUMBER | SHEET NO. SHT | SHEET NO. CONT. | REV. NO. |
|---|---|---|---|---|---|
| - | C421 | CD-323008 | G02 | G03 | 01 |

NG/D2-D (2012/01)
DMS VECTOR NGD200

THIS DRAWING AND THE INFORMATION CONTAINED HEREIN ARE THE SOLE PROPERTY OF National Grid SA NO REPRODUCTION IN FULL OR IN PART SHALL BE OBTAINED FROM THIS DOCUMENT WITHOUT THE WRITTEN CONSENT OF ITS OWNER.

BASE PLATE/
FOUNDATION

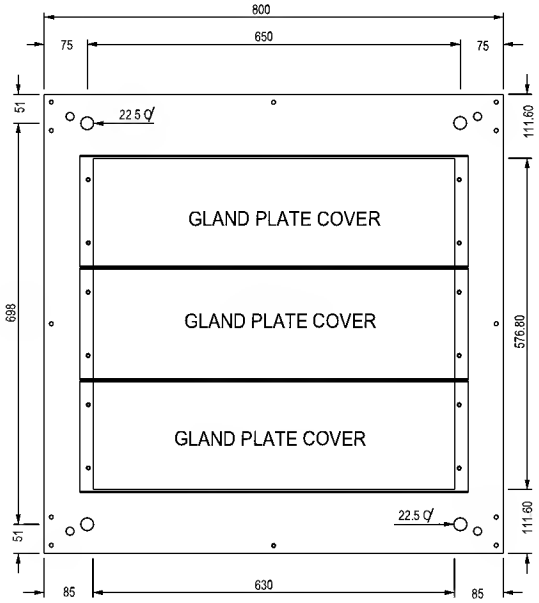


PLAN

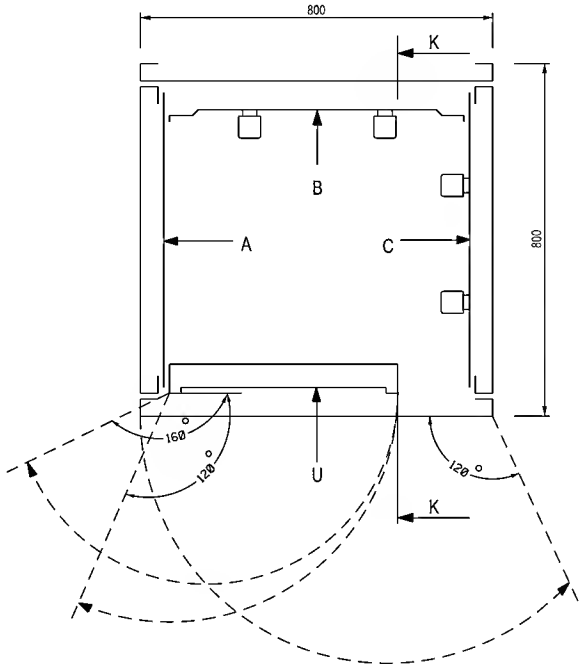


| AS-BUILT BY _____ DATE _____ | CONTRACT NO. 11131113/00 | JOB ORDER NO. S-13656 |
|---|---|---|

| REV. NO. | DATE | DESCRIPTION |
|---|---|---|
| 01 | 13 49 | FACTORY ASBUILT |
| 00 | 13 05 | FOR APPROVAL |

DRAWN BY RIZ CHECKED BY KVR
DATE STARTED 30.01.2013 DATE COMPLETED _____
OPRG. DEPT. CTPD ENG. DEPT. AUT-PSAC

ASSEMBLY DRAWING
132KV BUSBAR PROTN.MAIN-2 BU PANEL +BBP2-5
S/S 8709 - 132/13.8KV IN AL-KHARJ CITY
RIYADH SAUDI ARABIA

الشركة الوطنية لنقل الكهرباء
نقل الكهرباء
National Grid SA

| INDEX | PLANT NO. | DRAWING NUMBER | SHEET NO. SHT | SHEET NO. CONT. | REV. NO. |
|---|---|---|---|---|---|
| - | C421 | CD-323008 | G03 | G04 | 01 |

NG/D2-D (2012/01)
DMS VECTOR NGD200

THIS DRAWING AND THE INFORMATION CONTAINED HEREIN ARE THE SOLE PROPERTY OF NationalGrid SA NO REPRODUCTION IN FULL OR IN PART SHALL BE OBTAINED FROM THIS DOCUMENT WITHOUT THE WRITTEN CONSENT OF ITS OWNER.

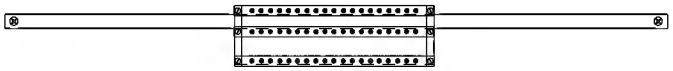

TOP VIEW FOR EARTHING BAR

U PLANE TOP LABEL

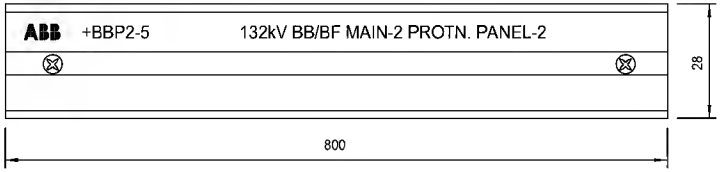


U PLANE BOTTOM LABEL

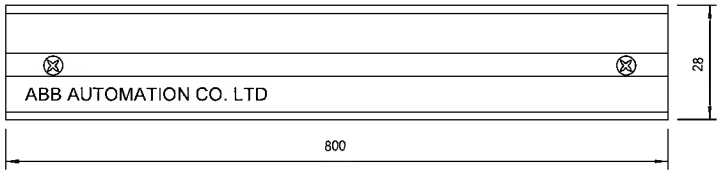


MANUFACTURING LABEL

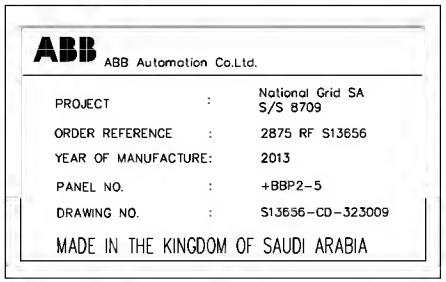


| REV. NO. | DATE | DESCRIPTION |
|---|---|---|
| 01 | 13 49 | FACTORY ASBUILT |
| 00 | 13 05 | FOR APPROVAL |

AS-BUILT BY _____ DATE _____

CONTRACT NO. 11131113/00 | JOB ORDER NO. S-13656

DRAWN BY RIZ CHECKED BY KVR

DATE STARTED 30.01.2013 DATE COMPLETED _____

DPRG. DEPT. CTPD ENG. DEPT. AUT-PSAC

ASSEMBLY DRAWING

132KV BUSBAR PROTN.MAIN-2 BU PANEL +BBP2-5

S/S 8709 - 132/13.8KV IN AL-KHARJ CITY

RIYADH SAUDI ARABIA

الشركة الوطنية لنقل الكهرباء

نقل الكهرباء National Grid SA

| INDEX | PLANT NO. | DRAWING NUMBER | SHEET NO. SHT | SHEET NO. CONT. | REV. NO. |
|---|---|---|---|---|---|
| - | C421 | CD-323008 | G04 | L00 | 01 |

NG/D2-D (2012/01)

DMS VECTOR NGD200

THIS DRAWING AND THE INFORMATION CONTAINED HEREIN ARE THE SOLE PROPERTY OF NationalGrid SA NO REPRODUCTION IN FULL OR IN PART SHALL BE OBTAINED FROM THIS DOCUMENT WITHOUT THE WRITTEN CONSENT OF ITS OWNER.

POWER SYSTEMS NETWORK MANAGEMENT
PROTECTION AND SUBSTATION AUTOMATION SYSTEMS
WBS NO: S-13656

ABB AUTOMATION COMPANY LTD
414, AL-KHARJ ROAD
SECOND INDUSTRIAL CITY
RIYADH-11383 K.S.A

CONTRACTOR : ABB Contracting Company

CLIENT : National GridSA

PROJECT : CONSTRUCTION OF NEW 132/13.8kV SS 8709 IN AL-KHARJ CITY

SUBSTATION : S/S 8709

CONTRACT NO. : 11131113/00

TITLE : LIST OF APPARATUS - +BBP2-5
[132KV BUSBAR PROTECTION MAIN-2 BAY UNIT PANEL]

THIS DRAWING AND THE INFORMATION CONTAINED HEREIN ARE THE SOLE PROPERTY OF NationalGrid SA NO REPRODUCTION IN FULL OR IN PART SHALL BE OBTAINED FROM THIS DOCUMENT WITHOUT THE WRITTEN CONSENT OF ITS OWNER.

AS-BUILT BY _____ DATE _____ | CONTRACT NO. 11131113/00 | JOB ORDER NO. S-13656

| REV. NO. | DATE | DESCRIPTION |
|---|---|---|
| 01 | 13 49 | FACTORY ASBUILT |
| 00 | 13 05 | FOR APPROVAL |

DRAWN BY RIZ CHECKED BY KVR
DATE STARTED 30.01.2013 DATE COMPLETED _____
DPRG. DEPT. CTPD ENG. DEPT. AUT-PSAC

COVER SHEET
132KV BUSBAR PROTN.MAIN-2 BU PANEL +BBP2-5
S/S 8709 - 132/13.8KV IN AL-KHARJ CITY
RIYADH SAUDI ARABIA

الشركة الوطنية لنقل الكهرباء
نقل الكهرباء
National Grid SA

| INDEX | PLANT NO. | DRAWING NUMBER | SHEET NO. SHT | SHEET NO. CONT. | REV. NO. |
|---|---|---|---|---|---|
| - | C421 | CD-323008 | L00 | L01 | 01 |

NG/D2-D (2012/01)
DMS VECTOR NGD200

| SR. NO. | GA. REF. | SCH. REF. | DESCRIPTION | SHT. | QTY. | TYPE | MAKE | ORDERING INFORMATION |
|---|---|---|---|---|---|---|---|---|
| | | | RELAY CUBICLE- +BBP2-5 FOR 132KV BB/BF MAIN-2 ACCOMODATING THE FOLLOWING | | 3 | VSH 200 | ABB | |
| 1 | U08.5001 | 87B+50BF-2/BU-D02 | BAY UNIT FOR NUMERICAL BUSBAR PROTECTION WITH FOLLOWING | 293,294 | | 7SS523 | SIEMENS | 7SS5231-5CA01+1AA1-2/GG |
| | U08.5002 | 87B+50BF-2/BU-D04 | HIGH TROUGH-FAULT STABILITY EVEN IN CASE OF CT SATURATION. | 295,296 | | | | |
| | U15.5001 | 87B+50BF-2/BU-D06 | NEUTRAL CURRENT CRITERION INSTANTANEOUS VALUES FOR FAULT RECORDING. | 297,298 | | | | |
| | | | DISTURBANCE FREE AND FAST DATA TRANSFER TO & FROM CENTRAL UNIT | | | | | |
| | | | PHASE SEGRAGATED MEASUREMENT | | | | | |
| | | | REDUCE CT PERFORMANCE REQUIREMENTS | | | | | |
| | | | BUILT IN HUMAN MACHINE INTERFACE | | | | | |
| | | | BUILT IN BREAKER FAILURE FUNCTION. | | | | | |
| | | | END FAULT PROTECTION FUNCTION | | | | | |
| | | | DISTURBANCE RECORDER | | | | | |
| | | | BINARY OUTPUT : 20 | | | | | |
| | | | BINARY OUTPUT : 6+2-WD | | | | | |
| | | | FULLY NUMERICAL SIGNAL PROCESSING | | | | | |
| | | | RATED CURRENT : 1A | | | | | |
| | | | AUX. VOLTAGE : 60-250V DC | | | | | |
| | | | RATED FREQUENCY : 60HZ | | | | | |
| | | | | | | | | |
| 2 | U22.5001 | TS-1 | TEST SWITCH FOR 87B+50BF-2/BU-D02 RELAY | 293 | 3 | MMLG02 | ALSTOM | MMLG02 R1AA 0001D |
| | U22.5002 | TS-2 | TEST SWITCH FOR 87B+50BF-2/BU-D04 RELAY | 295 | | | | |
| | U22.5003 | TS-3 | TEST SWITCH FOR 87B+50BF-2/BU-D06 RELAY | 297 | | | | |
| | | | | | | | | |
| 3 | U26.101 | 74BF-2/BU-D02 | DUAL TARGET RELAY FOR 87B+50BF-2/D02 AND 87B+50BF-2/D04 DC SUPERVISION | 232 | 1 | RXSF 1 | ABB | RK 271 019-AN |
| | | /74BF-2/BU-D04 | AUXILIARY VOLTAGE : 110-125V DC | 235 | | | | |
| | | | CONTACT DATA : 1NO + 2NC | | | | | |
| | | | FLAG : SELF RESET,REVERSE | | | | | |
| | | | | | | | | |
| | | | | | | | | |
| 4 | U26.301 | 74BF-2/BU-D06 | DUAL TARGET RELAY FOR 87B+50BF-2/D06 DC SUPERVISION | 238 | 1 | RXSF 1 | ABB | RK 271 019-AN |
| | | /SPARE | AUXILIARY VOLTAGE : 110-125V DC | | | | | |
| | | | CONTACT DATA : 1NO + 2NC | | | | | |
| | | | FLAG : SELF RESET,REVERSE | | | | | |

AS-BUILT BY _____ DATE _____ | CONTRACT NO. 11131113/00 | JOB ORDER NO. S-13656

| REV. NO. | DATE | DESCRIPTION |
|---|---|---|
| 01 | 13 49 | FACTORY ASBUILT |
| 00 | 13 05 | FOR APPROVAL |

DRAWN BY RIZ CHECKED BY KVR
DATE STARTED 30.01.2013 DATE COMPLETED _____
DPRG. DEPT. CTPD ENG. DEPT. AUT-PSAC

LIST OF APPARATUS
132KV BUSBAR PROTN.MAIN-2 BU PANEL +BBP2-5
S/S 8709 - 132/13.8KV IN AL-KHARJ CITY
RIYADH SAUDI ARABIA

الشركة الوطنية لنقل الكهرباء
نقل الكهرباء National Grid SA

| INDEX | PLANT NO. | DRAWING NUMBER | SHEET NO. SHT | SHEET NO. CONT. | REV. NO. |
|---|---|---|---|---|---|
| - | C421 | CD-323008 | L01 | L02 | 01 |

NG/D2-D (2012/01)
DMS VECTOR NGD200

THIS DRAWING AND THE INFORMATION CONTAINED HEREIN ARE THE SOLE PROPERTY OF NationalGrid SA NO REPRODUCTION IN FULL OR IN PART SHALL BE OBTAINED FROM THIS DOCUMENT WITHOUT THE WRITTEN CONSENT OF ITS OWNER.

| SR. NO. | GA. REF. | SCH. REF. | DESCRIPTION | SHT. | QTY. | TYPE | MAKE | ORDERING INFORMATION |
|---|---|---|---|---|---|---|---|---|
| 5 | | | MCB 2 POLE 6A, FOR DC SUPPLY | 216 | 3 | S2-H02 | ABB | GH2820164R0377 |
| | | | WITH 2NC AUXILIARY CONTACT | | | S282UC-K6 | | S2C-H11L- 2CDS 200936 R0001 |
| | U39.5001 | Q1 | D02 ± BF2 SUPPLY | | | | | |
| | U39.5002 | Q2 | D04 ± BF2 SUPPLY | | | | | |
| | U39.5003 | Q3 | D06 ± BF2 SUPPLY | | | | | |
| | | | | | | | | |
| 6 | | C1,C2 | MINIATURE CIRCUIT BREAKER, 2 POLE, 10A FOR | 211 | 2 | S202P-K10 | ABB | 2CDS 252 001 R0104 |
| | | | CONVENIENCE OUTLET WITH AUXILIARY SWITCH, 1NO + 1NC CONTACTS | | | +S2-H02 | | |
| | | | | | | | | |
| 7 | U39.5004 | C01 | CONVENIENCE OUTLET 10A, 127V AC | 211 | 2 | USM45 & USMS45 | LEGRAND | 74140 & 74180 |
| | | C02 | CONVENIENCE OUTLET 10A, 220V AC | | | | | |
| | | | | | | | | |
| 8 | | C3 | THERMOSTAT FOR SPACE HEATER, 5-60°C | 211 | 1 | SK 3110 | RITTAL | SK 3110 |
| | | | | | | | | |
| 9 | U39.5005 | TJ | TELEPHONE JACK 1GANG 4WIRE | 211 | 1 | EDF410 | EDISON | EDF410 |
| | | | | | | | | |
| 10 | | C7 | ON/OFF SWITCH FOR SPACE HEATER | 211 | 1 | M2SS1-10B | ABB | 1SFA 611 200 R1006 |
| | | | | | | MCBH-10 | | 1SFA 611 605 R1101 |
| | | | | | | | | |
| 11 | | DS | DOOR SWITCH FOR CONTROL OF CUBICLE INTERNAL ILLUMINATION LAMP | 211 | 1 | LS30P | ABB | 1SBV 010213 R1202 |
| | | | | | | | | |
| 12 | | IL | INTERNAL ILLUMINATION CUBICLE LAMP SUITABLE FOR | 211 | 1 | T-4 | SUNON | SP-20W |
| | | | 127V AC, 60Hz SUPPLY, 20W | | | | | |
| | | | | | | | | |
| 13 | | SH | SPACE HEATER, 55W, 127V, 60Hz | 211 | 1 | IFZEK7580104 | RICA | - |

AS-BUILT BY _____ DATE _____ | CONTRACT NO. 11131113/00 | JOB ORDER NO. S-13656

| REV. NO. | DATE | DESCRIPTION |
|---|---|---|
| 01 | 13 49 | FACTORY ASBUILT |
| 00 | 13 05 | FOR APPROVAL |

DRAWN BY RIZ CHECKED BY KVR
DATE STARTED 30.01.2013 DATE COMPLETED _____
DPRG. DEPT. CTPD ENG. DEPT. AUT-PSAC

LIST OF APPARATUS
132KV BUSBAR PROTN.MAIN-2 BU PANEL +BBP2-5
S/S 8709 - 132/13.8KV IN AL-KHARJ CITY
RIYADH SAUDI ARABIA

الشركة الوطنية لنقل الكهرباء
نقل الكهرباء
National Grid SA

| INDEX | PLANT NO. | DRAWING NUMBER | SHEET NO. SHT | SHEET NO. CONT. | REV. NO. |
|---|---|---|---|---|---|
| - | C421 | CD-323008 | L02 | L03 | 01 |

NG/D2-D (2012/01)
DMS VECTOR NGD200

THIS DRAWING AND THE INFORMATION CONTAINED HEREIN ARE THE SOLE PROPERTY OF NationalGrid SA NO REPRODUCTION IN FULL OR IN PART SHALL BE OBTAINED FROM THIS DOCUMENT WITHOUT THE WRITTEN CONSENT OF ITS OWNER.

| SR. NO. | ITEM DESIGNATION | DESCRIPTION | SHEET.NO. | QTY. | TYPE | MAKE | ORDERING INFORMATION |
|---|---|---|---|---|---|---|---|
| 14 | 1X1,2X1,3X1 | BOLT CONNECTING TERMINAL BLOCKS FOR DISCONNECTABLE CT CIRCUITS (10 EACH) | 301 | 30 | OTTA 6T P/P | PHOENIX | 0790462 |
| | X3 | SPRING LOADED TERMINAL BLOCKS FOR DISCONNECTABLE AC CIRCUITS | | 10 | D6/8.ST1.RS | ENTRELEC | 1SNA 115 831 R0400 |
| | X4 | SPRING LOADED TERMINAL BLOCK FOR DISCONNECTABLE DC EXT. CIRCUITS | | 10 | D6/8.ST1.RS | ENTRELEC | 1SNA 115 831 R0400 |
| | 1X51 | SPRING LOADED TERMINAL BLOCK FOR DC PROTN. CIRCUITS-BU-D02 | | 40 | M6/8.RS | ENTRELEC | 1SNA 115 688 R2500 |
| | 2X51 | SPRING LOADED TERMINAL BLOCK FOR DC PROTN. CIRCUITS-BU-D04 | | 40 | M6/8.RS | ENTRELEC | 1SNA 115 688 R2500 |
| | 3X51 | SPRING LOADED TERMINAL BLOCK FOR DC PROTN. CIRCUITS-BU-D06 | | 40 | M6/8.RS | ENTRELEC | 1SNA 115 688 R2500 |
| | X6 | SPRING LOADED TERMINAL BLOCK FOR ALARM CIRCUITS | | 5 | M6/8.RS | ENTRELEC | 1SNA 115 688 R2500 |
| | X61 | KNIFE TYPE TERMINAL BLOCKS FOR COMMON ALARM CIRCUITS | | 15 | M6/8.SNB | ENTRELEC | 1SNA 115 685 R1200 |
| | XTJ | SPRING LOADED TERMINAL BLOCKS FOR TELEPHONE JACK | | 5 | M6/8.RS | ENTRELEC | 1SNA 115 688 R2500 |
| | XSH | SPRING LOADED TERMINAL BLOCKS FOR SPACE HEATER | | 3 | M6/8.RS | ENTRELEC | 1SNA 115 688 R2500 |

AS-BUILT BY _____ DATE _____ | CONTRACT NO. 11131113/00 | JOB ORDER NO. S-13656

| REV. NO. | DATE | DESCRIPTION |
|---|---|---|
| 01 | 13 49 | FACTORY ASBUILT |
| 00 | 13 05 | FOR APPROVAL |

DRAWN BY RIZ CHECKED BY KVR
DATE STARTED 30.01.2013 DATE COMPLETED _____
DPRG. DEPT. CTPD ENG. DEPT. AUT-PSAC

LIST OF APPARATUS
132KV BUSBAR PROTN.MAIN-2 BU PANEL +BBP2-5
S/S 8709 - 132/13.8KV IN AL-KHARJ CITY
RIYADH SAUDI ARABIA

الشركة الوطنية لنقل الكهرباء
نقل الكهرباء
National Grid SA

| INDEX | PLANT NO. | DRAWING NUMBER | SHEET NO. SHT | SHEET NO. CONT. | REV. NO. |
|---|---|---|---|---|---|
| - | C421 | CD-323008 | L03 | L04 | 01 |

NG/D2-D (2012/01)
DMS VECTOR NGD200

THIS DRAWING AND THE INFORMATION CONTAINED HEREIN ARE THE SOLE PROPERTY OF NationalGrid SA NO REPRODUCTION IN FULL OR IN PART SHALL BE OBTAINED FROM THIS DOCUMENT WITHOUT THE WRITTEN CONSENT OF ITS OWNER.

| LABEL REF. | LABEL ENGRAVING | MATERIALS | ENGRAVING | LABEL SIZE | LETTER SIZE |
|---|---|---|---|---|---|
| U08.5001 | U08.5001<br>87B+50BF-2/BU-D02 | TRAFOLITE | BLACK LETTERS<br>ON WHITE BACKGROUND | 50X15mm | 4mm |
| U08.5002 | U08.5002<br>87B+50BF-2/BU-004 | TRAFOLITE | BLACK LETTERS<br>ON WHITE BACKGROUND | 50X15mm | 4mm |
| U15.5001 | U15.5001<br>87B+50BF-2/BU-006 | TRAFOLITE | BLACK LETTERS<br>ON WHITE BACKGROUND | 50X15mm | 4mm |
| U22.5001 | U22.5001<br>TS-1 | ALUMINUM PAPER FOIL | BLACK LETTERS | 50X10mm | 3mm |
| U22.5002 | U22.5002<br>TS-2 | ALUMINUM PAPER FOIL | BLACK LETTERS | 50X10mm | 3mm |
| U22.5003 | U22.5003<br>TS-3 | ALUMINUM PAPER FOIL | BLACK LETTERS | 50X10mm | 3mm |
| U26.101 | U26.101<br>74BF-2/D02<br>74BF-2/D04 | ALUMINUM PAPER FOIL | BLACK LETTERS | 50X10mm | 3mm |
| U26.301 | U26.301<br>74BF-2/D06 | ALUMINUM PAPER FOIL | BLACK LETTERS | 50X10mm | 3mm |
| U39.5001 | U39.5001<br>DC SUPPLY MCB FOR D02 | TRAFOLITE | BLACK LETTERS<br>ON WHITE BACKGROUND | 50X15mm | 4mm |
| U39.5002 | U39.5002<br>DC SUPPLY MCB FOR D04 | TRAFOLITE | BLACK LETTERS<br>ON WHITE BACKGROUND | 50X15mm | 4mm |
| U39.5003 | U39.5003<br>DC SUPPLY MCB FOR D06 | TRAFOLITE | BLACK LETTERS<br>ON WHITE BACKGROUND | 50X15mm | 4mm |
| U39.5004 | U39.5004<br>C01-127V,C02-220V | TRAFOLITE | BLACK LETTERS<br>ON WHITE BACKGROUND | 50X15mm | 4mm |
| U39.5005 | U39.5005<br>TJ | TRAFOLITE | BLACK LETTERS<br>ON WHITE BACKGROUND | 50X15mm | 4mm |
| | | | | | |
| | | | | | |

AS-BUILT BY _____ DATE _____ | CONTRACT NO. 11131113/00 | JOB ORDER NO. S-13656

| REV. NO. | DATE | DESCRIPTION |
|---|---|---|
| 01 | 13 49 | FACTORY ASBUILT |
| 00 | 13 05 | FOR APPROVAL |

DRAWN BY RIZ CHECKED BY KVR
DATE STARTED 30.01.2013 DATE COMPLETED _____
DPRG. DEPT. CTPD ENG. DEPT. AUT-PSAC

LIST OF APPARATUS
132KV BUSBAR PROTN.MAIN-2 BU PANEL +BBP2-5
S/S 8709 - 132/13.8KV IN AL-KHARJ CITY
RIYADH SAUDI ARABIA

الشركة الوطنية لنقل الكهرباء
نقل الكهرباء
National Grid SA

| INDEX | PLANT NO. | DRAWING NUMBER | SHEET NO. SHT | SHEET NO. CONT. | REV. NO. |
|---|---|---|---|---|---|
| - | C421 | CD-323008 | L04 | L05 | 01 |

NG/D2-D (2012/01)
DMS VECTOR NGD200

THIS DRAWING AND THE INFORMATION CONTAINED HEREIN ARE THE SOLE PROPERTY OF NationalGrid SA NO REPRODUCTION IN FULL OR IN PART SHALL BE OBTAINED FROM THIS DOCUMENT WITHOUT THE WRITTEN CONSENT OF ITS OWNER.

| LABEL REF. | LABEL ENGRAVING | MATERIALS | ENGRAVING | LABEL SIZE | LETTER SIZE |
|---|---|---|---|---|---|
| C1 | C1<br>127V AC SUPPLY MCB | TRAFOLITE | BLACK LETTERS<br>ON WHITE BACKGROUND | 50X15mm | 4mm |
| C2 | C2<br>220V AC SUPPLY MCB | TRAFOLITE | BLACK LETTERS<br>ON WHITE BACKGROUND | 50X15mm | 4mm |
| C3 | C3<br>THERMOSTAT | TRAFOLITE | BLACK LETTERS<br>ON WHITE BACKGROUND | 50X15mm | 4mm |
| C7 | C7<br>ON/OFF SWITCH | TRAFOLITE | BLACK LETTERS<br>ON WHITE BACKGROUND | 50X15mm | 4mm |
| DS | DS<br>DOOR SWITCH | TRAFOLITE | BLACK LETTERS<br>ON WHITE BACKGROUND | 50X15mm | 4mm |
| IL | IL<br>ILLUMINATION LAMP | TRAFOLITE | BLACK LETTERS<br>ON WHITE BACKGROUND | 50X15mm | 4mm |
| SH | SH<br>SPACE HEATER | TRAFOLITE | BLACK LETTERS<br>ON WHITE BACKGROUND | 50X15mm | 4mm |
| | | | | | |
| | | | | | |
| | | | | | |
| | | | | | |

AS-BUILT BY _____ DATE _____ | CONTRACT NO. 11131113/00 | JOB ORDER NO. S-13656

| REV. NO. | DATE | DESCRIPTION |
|---|---|---|
| 01 | 13 49 | FACTORY ASBUILT |
| 00 | 13 05 | FOR APPROVAL |

DRAWN BY RIZ CHECKED BY KVR
DATE STARTED 30.01.2013 DATE COMPLETED _____
OPRG. DEPT. CTPD ENG. DEPT. AUT-PSAC

LIST OF APPARATUS
132KV BUSBAR PROTN.MAIN-2 BU PANEL +BBP2-5
S/S 8709 - 132/13.8KV IN AL-KHARJ CITY
RIYADH SAUDI ARABIA

الشركة الوطنية لنقل الكهرباء
نقل الكهرباء
National Grid SA

| INDEX | PLANT NO. | DRAWING NUMBER | SHEET NO. SHT | SHEET NO. CONT. | REV. NO. |
|---|---|---|---|---|---|
| - | C421 | CD-323008 | L05 | NIL | 01 |

NG/D2-D (2012/01)
DMS VECTOR NGD200

THIS DRAWING AND THE INFORMATION CONTAINED HEREIN ARE THE SOLE PROPERTY OF NationalGrid SA NO REPRODUCTION IN FULL OR IN PART SHALL BE OBTAINED FROM THIS DOCUMENT WITHOUT THE WRITTEN CONSENT OF ITS OWNER.

POWER SYSTEMS NETWORK MANAGEMENT
PROTECTION AND SUBSTATION AUTOMATION SYSTEMS
WBS NO: S-13656

ABB AUTOMATION COMPANY LTD.
414, AL-KHARJ ROAD
SECOND INDUSTRIAL CITY
RIYADH-11383 K.S.A

CONTRACTOR : ABB Contracting Company

CLIENT : National GridSA

PROJECT : CONSTRUCTION OF NEW 132/13.8kV SS 8709 IN AL-KHARJ CITY

SUBSTATION : S/S 8709

CONTRACT NO. : 11131113/00

TITLE : SCHEMATICS DRAWINGS - +BBP2-5
[132KV BUSBAR PROTECTION MAIN-2 BAY UNIT PANEL]

THIS DRAWING AND THE INFORMATION CONTAINED HEREIN ARE THE SOLE PROPERTY OF NationalGrid SA NO REPRODUCTION IN FULL OR IN PART SHALL BE OBTAINED FROM THIS DOCUMENT WITHOUT THE WRITTEN CONSENT OF ITS OWNER.

AS-BUILT BY _____ DATE _____ | CONTRACT NO. 11131113/00 | JOB ORDER NO. S-13656

| REV. NO. | DATE | DESCRIPTION |
|---|---|---|
| 01 | 13 49 | FACTORY ASBUILT |
| 00 | 13 05 | FOR APPROVAL |

DRAWN BY RIZ CHECKED BY KVR
DATE STARTED 30.01.2013 DATE COMPLETED _____
DPRG. DEPT. CTPD ENG. DEPT. AUT-PSAC

COVER SHEET
132KV BUSBAR PROTN.MAIN-2 BU PANEL +BBP2-5
S/S 8709 - 132/13.8KV IN AL-KHARJ CITY
RIYADH SAUDI ARABIA

الشركة الوطنية لنقل الكهرباء
نقل الكهرباء
National Grid SA

| INDEX | PLANT NO. | DRAWING NUMBER | SHEET NO. SHT | SHEET NO. CONT. | REV. NO. |
|---|---|---|---|---|---|
| - | C421 | CD-323009 | 000 | 001 | 01 |

NG/D2-D (2012/01)
DMS VECTOR NGD200

| CONTENTS | ABB SHT.NO. | REV.00 | REV.01 | REV.02 |
|---|---|---|---|---|
| COVER SHEET | 000 | X | X | |
| CONTENTS SHEET | 001 | X | X | |
| GRAPHICAL SYMBOLS FOR DIAGRAMS | 011 | X | X | |
| GRAPHICAL SYMBOLS FOR DIAGRAMS | 012 | X | X | |
| COMMON LEGEND | 013 | X | X | |
| FERRULE AND WIRING DETAILS | 014 | X | X | |
| DRAWING REFERENCES | 015 | X | X | |
| DRAWING REFERENCES | 016 | X | X | |
| PRIMARY SYSTEM | 051-056 | X | X | |
| AC SUPPLY FOR ILLUMINATION & POWER SOCKET | 211 | X | X | |
| CUB. LIGHTING, HEATER & SOCKET ALARM CKT. | 212 | X | X | |
| DC SUPPLY DISTRIBUTION | 216 | X | X | |
| CURRENT TRANSFORMER INPUTS -87B+50BF-2/BU-D02 | 221 | X | X | |
| CURRENT TRANSFORMER INPUTS -87B+50BF-2/BU-D04 | 222 | X | X | |
| CURRENT TRANSFORMER INPUTS -87B+50BF-2/BU-D06 | 223 | X | X | |
| 87B+50BF-2/BU-D02 PROTN.RELAY-BINARY INPUTS | 231 | X | X | |
| 87B+50BF-2/BU-D02 PROTN.RELAY-BINARY INPUTS | 232 | X | X | |
| CBF + BUSBAR PROTN.-2 TRIP RELAY CIRCUIT -D05 | 233 | X | X | |
| 87B+50BF-2/BU-D04 PROTN.RELAY-BINARY INPUTS | 234 | X | X | |
| 87B+50BF-2/BU-D04 PROTN.RELAY-BINARY INPUTS | 235 | X | X | |
| CBF + BUSBAR PROTN.-2 TRIP RELAY CIRCUIT -D03 | 236 | X | X | |
| 87B+50BF-2/BU-D06 PROTN.RELAY-BINARY INPUTS | 237 | X | X | |
| 87B+50BF-2/BU-D06 PROTN.RELAY-BINARY INPUTS | 238 | X | X | |
| CBF + BUSBAR PROTN.-2 TRIP RELAY CIRCUIT -D01 | 239 | X | X | |
| | | | | |
| | | | | |

| CONTENTS | ABB SHT.NO. | REV.00 | REV.01 | REV.02 |
|---|---|---|---|---|
| COMMON ALARM CIRCUITS | 292 | X | X | |
| BLOCK REFERENCE 87B+50BF-2/BU-D02 | 293 | X | X | |
| BLOCK REFERENCE 87B+50BF-2/BU-D02 | 294 | X | X | |
| BLOCK REFERENCE 87B+50BF-2/BU-D04 | 295 | X | X | |
| BLOCK REFERENCE 87B+50BF-2/BU-D04 | 296 | X | X | |
| BLOCK REFERENCE 87B+50BF-2/BU-D06 | 297 | X | X | |
| BLOCK REFERENCE 87B+50BF-2/BU-D06 | 298 | X | X | |
| TERMINAL BLOCKS REFERENCE | 301 | X | X | |

AS-BUILT BY _____ DATE _____ | CONTRACT NO. 11131113/00 | JOB ORDER NO. S-13656

| REV. NO. | DATE | DESCRIPTION |
|---|---|---|
| 01 | 13 49 | FACTORY ASBUILT |
| 00 | 13 05 | FOR APPROVAL |

DRAWN BY RIZ CHECKED BY KVR
DATE STARTED 30.01.2013 DATE COMPLETED _____
DPRC. DEPT. CTPD ENG. DEPT. AUT-PSAC

CONTENTS SHEET
132KV BUSBAR PROTN.MAIN-2 BU PANEL +BBP2-5
S/S 8709 - 132/13.8KV IN AL-KHARJ CITY
RIYADH SAUDI ARABIA

الشركة الوطنية لنقل الكهرباء
نقل الكهرباء
National Grid SA

| INDEX | PLANT NO. | DRAWING NUMBER | SHEET NO. SHT | SHEET NO. CONT. | REV. NO. |
|---|---|---|---|---|---|
| - | C421 | CD-323009 | 001 | 002 | 01 |

NG/D2-D (2012/01)
DMS VECTOR NGD200

THIS DRAWING AND THE INFORMATION CONTAINED HEREIN ARE THE SOLE PROPERTY OF NationalGrid SA NO REPRODUCTION IN FULL OR IN PART SHALL BE OBTAINED FROM THIS DOCUMENT WITHOUT THE WRITTEN CONSENT OF ITS OWNER.

| SYMBOL | DESCRIPTION |
|---|---|
| | FRAME CONNECTION |
| | EARTH CONNECTION |
| | RESISTOR |
| | VARIABLE RESISTOR |
| | RESISTOR WITH PRESET ADJUSTMENT |
| | CAPACITOR |
| | SEMICONDUCTOR DIODE USED AS A CAPACITIVE DEVICE |
| | OPEN CONTACT, MAKE CONTACT |
| | CLOSED CONTACT, BREAK CONTACT |
| | CHANGE-OVER CONTACT, BREAK BEFORE MAKE |
| | MAKE CONTACT WHICH IS EARLY WHEN OPERATING AND LATE WHEN RELEASING |
| | BREAK CONTACT WHICH IS LATE WHEN OPERATING AND EARLY WHEN RELEASING |
| | SWITCHING DEVICE WITH MANUAL CONTROL |
| | MAKE CONTACT DELAYED WHEN OPERATING |
| | BREAK CONTACT DELAYED WHEN RELEASING |
| | MAKE CONTACT DELAYED WHEN OPERATING AND RELEASING |
| | MAIN CONTACT OF A SWITCH DISCONNECTOR |
| | MAIN CONTACT OF A DISCONNECTOR |

| SYMBOL | DESCRIPTION |
|---|---|
| | MAIN CONTACT OF A CIRCUIT BREAKER |
| | PASSING MAKE CONTACT CLOSING MOMENTARILY DURING OPERATION AND RELEASE |
| | BREAK CONTACT DELAYED WHEN OPERATING |
| | MAKE CONTACT DELAYED WHEN RELEASING |
| | TWO MECHANICAL LINKS CROSSING WITHOUT CONNECTION |
| | JUNCTION OF MECHANICAL LINKS |
| | AUTOMATIC RESET |
| | NON-AUTOMATIC RESET |
| | SWITCHING DEVICE WITH MANUAL OPERATION AND WITH AUTOMATIC RESET |
| | SWITCHING DEVICE WITH MANUAL OPERATION AND WITH NON-AUTOMATIC RESET |
| | CHANGE-OVER SWITCHING DEVICE WITH MANUAL CONTROL AUTOMATIC RESET FROM POSITION 1-2 TO THE NEUTRAL POSITION |
| | RELAY WITH MAKE CONTACT |
| | RELAY WITH CHANGE-OVER CONTACT |
| | RELAY WITH MAKE CONTACT, DELAYED WHEN OPERATING |
| | RELAY WITH MAKE CONTACT, DELAYED WHEN RELEASING |
| | RELAY WITH MAKE CONTACT, DELAYED WHEN OPERATING AND RELEASING |

| SYMBOL | DESCRIPTION |
|---|---|
| | RELAY WITH TWO MAKE CONTACTS, ONE OF THEM DELAYED WHEN OPERATING |
| | RELAY WITH TWO ACTUATORS AND A TWO STABLE POSITIONS |
| | SIGNALLING LAMP |
| | MECHANICAL INDICATOR WITH AUTOMATIC RESET |
| | MECHANICAL INDICATOR WITH NON-AUTOMATIC RESET |
| | ELECTRICALLY CONTROLLED MECHANICAL INDICATOR WITH AUTOMATIC RESET |
| | ELECTRICALLY CONTROLLED MECHANICAL INDICATOR WITH NON-AUTOMATIC RESET |
| | RELAY WITH MECHANICAL INDICATOR |
| | ELECTRO-MECHANICAL POSITION INDICATOR WITH ONE DE-ENERGIZED AND ONE OPERATED POSITION |
| | ELECTRO-MECHANICAL POSITION INDICATOR WITH ONE DE-ENERGIZED AND TWO OPERATED POSITION |
| | BELL, BUZZER |
| | SIREN , HORN |

AS-BUILT BY _____ DATE _____ | CONTRACT NO. 11131113/00 | JOB ORDER NO. S-13656

| REV. NO. | DATE | DESCRIPTION |
|---|---|---|
| 01 | 13 49 | FACTORY ASBUILT |
| 00 | 13 05 | FOR APPROVAL |

DRAWN BY RIZ CHECKED BY KVR
DATE STARTED 30.01.2013 DATE COMPLETED _____
DPRG. DEPT. CTPD ENG. DEPT. AUT-PSAC

GRAPHICAL SYMBOLS FOR DIAGRAMS
132KV BUSBAR PROTN.MAIN-2 BU PANEL +BBP2-5
S/S 8709 - 132/13.8KV IN AL-KHARJ CITY
RIYADH SAUDI ARABIA

الشركة الوطنية لنقل الكهرباء
نقل الكهرباء
National Grid SA

| INDEX | PLANT NO. | DRAWING NUMBER | SHEET NO. SHT | SHEET NO. CONT. | REV. NO. |
|---|---|---|---|---|---|
| - | C421 | CD-323009 | 011 | 012 | 01 |

NG/D2-0 (2012/01)
DMS VECTOR NGD200

THIS DRAWING AND THE INFORMATION CONTAINED HEREIN ARE THE SOLE PROPERTY OF NationalGrid SA NO REPRODUCTION IN FULL OR IN PART SHALL BE OBTAINED FROM THIS DOCUMENT WITHOUT THE WRITTEN CONSENT OF ITS OWNER.

| SYMBOL | DESCRIPTION |
|---|---|
| | FUSE / LINK |
| | FUSE WITH THE SUPPLY SIDE INDICATED |
| | SINGLE-PHASE TRANSFORMER WITH TWO SEPARATE WINDINGS (TWO ALTERNATIVE FORMS) |
| | SINGLE-PHASE TRANSFORMER WITH THREE SEPARATE WINDINGS (TWO ALTERNATIVE FORMS) |
| | SINGLE-PHASE TRANSFORMER WITH FERRO MAGNETIC CORE |
| | SINGLE-PHASE VOLTAGE TRANSFORMER (MULTI-LINE AND SINGLE-LINE REPRESENTATION) |
| | SINGLE-PHASE VOLTAGE TRANSFORMER WITH TWO SECONDARY WINDINGS (MULTI-LINE AND SINGLE-LINE REPRESENTATION) |
| | CURRENT TRANSFORMER (MULTI-LINE AND SINGLE-LINE REPRESENTATION) |
| | CURRENT TRANSFORMER WITH TWO CORES (MULIT-LINE AND SINGLE-LINE REPRESENTATION) |
| | CURRENT TRANSFORMER WITH TWO SECONDARY WINDINGS ON ONE CORE (MULTI-LINE AND SINGLE-LINE REPRESENTATION) |
| | FILTER |
| | HIGH-PASS FILTER |
| | BAND-PASS FILTER |
| V | VOLTMETER |
| A | AMMETER |

| SYMBOL | DESCRIPTION |
|---|---|
| W | WATTMETER |
| Var | VARMETER |
| PF | POWER FACTOR METER |
| | POSITION INDICATOR |
| | SYNCHROSCOPE |
| V | RECORDING VOLTMETER |
| W | RECORDING WATTMETER |
| h | HOUR METER |
| Wh | WATT-HOUR METER |
| Wh | WATT-HOUR METER FOR ENERGY FROM A BUSBAR SYSTEM |
| | ELEMENT WITH STATIC INPUT |
| | ELEMENT WITH STATIC NEGATED INPUT |
| | ELEMENT WITH STATIC NEGATED OUTPUT |
| | ELEMENT WITH DYNAMIC INPUT |
| | ELEMENT WITH DYNAMIC NEGATED INPUT |
| | ELEMENT WITH INHIBITING INPUT |

| SYMBOL | DESCRIPTION |
|---|---|
| | ELEMENT WITH NEGATED INHIBITING INPUT |
| | ELEMENT WITH INPUT WHICH DOES NOT CARRY ANY LOGIC INFORMATION |
| X\| | ELEMENT WITH POSTPONED OUTPUT |
| & | AND-ELEMENT WITH TWO INPUTS |
| >1 | OR-ELEMENT WITH TWO INPUTS |
| ≥2 | LOGIC THRESHOLD ELEMENT WITH FOUR INPUTS AND THRESHOLD VALUE 2 |
| =2 | ELEMENT WITH THREE INPUTS FOR "2 AND ONLY 2" |
| =1 | EXCLUSIVE OR-ELEMENT WITH THREE INPUTS |
| = | LOGIC IDENTITY ELEMENT WITH THREE INPUTS |
| >n/2 | MAJORITY ELEMENT WITH THREE INPUTS |
| 1 | NEGATOR |
| & | NAND ELEMENT WITH TWO INPUTS |
| >1 | NOR ELEMENT WITH TWO INPUTS |
| X Y | BISTABLE ELEMENT |

AS-BUILT BY _____ DATE _____ | CONTRACT NO. 11131113/00 | JOB ORDER NO. S-13656

| REV. NO. | DATE | DESCRIPTION |
|---|---|---|
| 01 | 13 49 | FACTORY ASBUILT |
| 00 | 13 05 | FOR APPROVAL |

DRAWN BY RIZ CHECKED BY KVR
DATE STARTED 30.01.2013 DATE COMPLETED _____
DPRC. DEPT. CTPD ENG. DEPT. AUT-PSAC

GRAPHICAL SYMBOLS FOR DIAGRAMS
132KV BUSBAR PROTN.MAIN-2 BU PANEL +BBP2-5
S/S 8709 - 132/13.8KV IN AL-KHARJ CITY
RIYADH SAUDI ARABIA

الشركة الوطنية لنقل الكهرباء
نقل الكهرباء
National Grid SA

| INDEX | PLANT NO. | DRAWING NUMBER | SHEET NO. SHT | SHEET NO. CONT. | REV. NO. |
|---|---|---|---|---|---|
| - | C421 | CD-323009 | 012 | 013 | 01 |

NG/D2-D (2012/01)
DMS VECTOR NGD200

THIS DRAWING AND THE INFORMATION CONTAINED HEREIN ARE THE SOLE PROPERTY OF NationalGrid SA NO REPRODUCTION IN FULL OR IN PART SHALL BE OBTAINED FROM THIS DOCUMENT WITHOUT THE WRITTEN CONSENT OF ITS OWNER.

## LEGENDS

| | |
|---|---|
| ±R1 | DC SUPPLY – MAIN PROTECTION |
| ±R2 | DC SUPPLY – SECONDARY PROTECTION |
| ±R3 | DC SUPPLY – BACK UP PROTECTION |
| ±IT | DC SUPPLY – INTER TRIP |
| FL | DC SUPPLY – FLASHING CIRCUIT |
| BB RS± | DC SUPPLY – BUS BAR – PROTECTION RESET |
| BB CBF±/CBF± | DC SUPPLY – CBF PROTECTION |
| R | RESET BUS – ALARM SYSTEM |
| CR | CONTROL ROOM |
| ECC | ENERGY CONTROL CENTRE |
| LOCAL | THE LOCATION OF CONTROLLED DEVICE |
| REMOTE | ANY OTHER LOCATION NOT LOCAL |
| ON | CB NORMALLY OPEN AUXILIARY CONTACT |
| OFF | CB NORMALLY CLOSED AUXILIARY CONTACT |
| A | COMMON |
| T | TEST POSITION |
| S | SERVICE POSITION |
| CS | CLOSE IN SERVICE POSITION |
| CT | CLOSE IN TEST POSITION |
| LS | LOCAL SERVICE |
| LT | LOCAL TEST |
| LC | LOCAL CLOSE |
| LO | LOCAL OPEN |
| RO | REMOTE OPEN |
| OP | OPERATE |
| RE | RESET |

## NOTES

### LABELS

WHITE LABEL WITH BLACK LETTERING WILL BE PROVIDED FOR ALL MOUNTED APPARATUS EQUIPMENT IDENTIFICATION AND FUNCTION REFERENCE LABEL WILL BE PROVIDED FOR FRONT MOUNTED EQUIPMENTS OF THE PANEL AND EQUIPMENT IDENTIFICATION LABEL WILL BE PROVIDED FOR INTERNALLY MOUNTED EQUIPMENTS

### WIRING

PVC INSULATED 600V GRADE
2.5 SQ.mm. YELLOW COLOURED FOR CT CIRCUITS
2.5 SQ.mm. RE COLOURED FOR VT CIRCUITS
1.5 SQ.mm. GREY COLOURED FOR DC SUPPLY, SCADA AND CONTROL CIRCUITS
2.5 SQ.mm. BLACK COLOURED FOR AVC AND AC CIRCUITS
2.5 SQ.mm. YELLOW/GREEN COLOURED FOR EARTHING CONNECTIONS
FOLLOWING MARKERS SHALL BE PROVIDED ON FOLLOWING WIRES:
+ SIGN FOR DC + WIRE
– SIGN FOR DC – WIRE

### LUGS

A. CT CIRCUITS– RING TYPE
B. OTHER CIRCUITS – SPADE TYPE

### FERULLING

YELLO TUBE 3.2 mm FOR 1.5SQ mm WIRES AND 4.2 FOR 2.5 SQ mm WIRES
( AS PER 31 – TMSS–1, RE.0 )

AS-BUILT BY _____ DATE _____ | CONTRACT NO. 11131113/00 | JOB ORDER NO. S-13656

| REV. NO. | DATE | DESCRIPTION |
|---|---|---|
| 01 | 13 49 | FACTORY ASBUILT |
| 00 | 13 05 | FOR APPROVAL |

DRAWN BY RIZ CHECKED BY KVR
DATE STARTED 30.01.2013 DATE COMPLETED _____
DPRG. DEPT. CTPD ENG. DEPT. AUT-PSAC

COMMON LEGEND
132KV BUSBAR PROTN.MAIN-2 BU PANEL +BBP2-5
S/S 8709 - 132/13.8KV IN AL-KHARJ CITY
RIYADH SAUDI ARABIA

الشركة الوطنية لنقل الكهرباء
نقل الكهرباء
National Grid SA

| INDEX | PLANT NO. | DRAWING NUMBER | SHEET NO. SHT | SHEET NO. CONT. | REV. NO. |
|---|---|---|---|---|---|
| - | C421 | CD-323009 | 013 | 014 | 01 |

NG/D2-D (2012/01)
DMS VECTOR NGD200

THIS DRAWING AND THE INFORMATION CONTAINED HEREIN ARE THE SOLE PROPERTY OF NationalGrid SA NO REPRODUCTION IN FULL OR IN PART SHALL BE OBTAINED FROM THIS DOCUMENT WITHOUT THE WRITTEN CONSENT OF ITS OWNER.

FOR 132kV RELAY & CONTROL, PROTN. PANELS

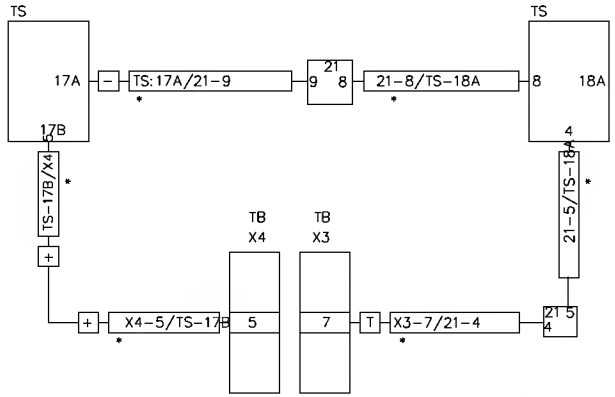


AS PER IEC-391 FIG 14a (W/O SUPPLEMENTARY/IDENTIFICATION MARK)

FOR 132kV PANELS INTERPANEL WIRING

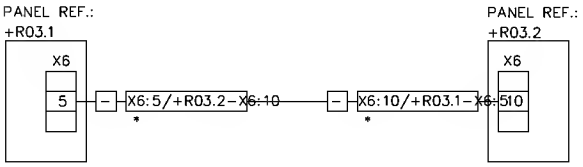


AS PER IEC-391 FIG 14d (W/O SUPPLEMENTARY/IDENTIFICATION MARK)

| | |
|---|---|
| WIRES – PVC insuloted,stronded, cooled onneoled copper conductor groded for 1000V | o. CT Circuits – 2.5 Sqmm PVC Yellow colour |
| | b. VT Circuits – 1.5 Sqmm PVC Red colour |
| | c. DC, & CONTROL Circuits – 1.5 Sqmm PVC Grey colour |
| | d. Alorm Circuits – 1.0 Sqmm PVC Blue colour |
| | e. AVC & AC Circuits – 2.5 Sqmm PVC Block colour |
| | f. Eorth Circuits – 2.5 Sqmm PVC Yellow/Green colour |
| LUGS – Pre-Insuloted | o( CT Circuits – Ring type |
| | b( Other Circuits – Spode type |

NOTE: 1 ADDITIONAL MARKING AS APPLICABLE

NOTE: 2 FERRULE NUMBERING WILL BE BLACK LETTERS ON YELLOW TUBE
3.2 mm for 1.5 sq mm wires and
4.2 mm for 2.5 sq mm wires
( As per 31-TMSS-1, REV 0 )

NOTE: 3 STARTING POINT OF THE FERRULE LEFT TO RIGHT

| REV. NO. | DATE | DESCRIPTION |
|---|---|---|
| 01 | 13 49 | FACTORY ASBUILT |
| 00 | 13 05 | FOR APPROVAL |

AS-BUILT BY _____ DATE _____ CONTRACT NO. 11131113/00 JOB ORDER NO. S-13656

DRAWN BY RIZ CHECKED BY KVR
DATE STARTED 30.01.2013 DATE COMPLETED _____
DPRG. DEPT. CTPD ENG. DEPT. AUT-PSAC

# FERRULE AND WIRING DETAILS

132KV BUSBAR PROTN.MAIN-2 BU PANEL +BBP2-5

S/S 8709 - 132/13.8KV IN AL-KHARJ CITY

RIYADH SAUDI ARABIA

الشركة الوطنية لنقل الكهرباء

نقل الكهرباء National Grid SA

| INDEX | PLANT NO. | DRAWING NUMBER | SHEET NO. SHT | SHEET NO. CONT. | REV. NO. |
|---|---|---|---|---|---|
| - | C421 | CD-323009 | 014 | 015 | 01 |

NG/02-0 (2012/01)

DMS VECTOR NG0200

THIS DRAWING AND THE INFORMATION CONTAINED HEREIN ARE THE SOLE PROPERTY OF NationalGrid SA NO REPRODUCTION IN FULL OR IN PART SHALL BE OBTAINED FROM THIS DOCUMENT WITHOUT THE WRITTEN CONSENT OF ITS OWNER.

| MANUFACTURER | SCHEMATICS DWG.NO | PANEL DESCRIPITION | PANEL REFERENCE |
|---|---|---|---|
| ABB<br>PROTECTION & SUBSTATION AUTOMATION | | SS B709 132kV RELAY PANELS | |
| | CD-32292B | 132/13.8kV GT-1 RELAY PANEL -1 | +RD5.1 |
| | | 132/13.8kV GT-1 RELAY PANEL -2 | +RD5.2 |
| | CD-322931 | 132/13.8kV GT-2 RELAY PANEL -1 | +RD1.1 |
| | | 132/13.8kV GT-2 RELAY PANEL -2 | +RD1.2 |
| | CD-322934 | 132/13.8kV GT-3 RELAY PANEL -1 | +RD4.1 |
| | | 132/13.8kV GT-3 RELAY PANEL -2 | +RD4.2 |
| | CD-322936 | 132/13.8kV TRANSFORMER-1,2& 3 AVC PANEL | +AVC |
| | CD-322922 | 132KV SPARE-1 UGF RELAY PANEL -1 | +RD7.1 |
| | | 132KV SPARE-1 UGF RELAY PANEL -2 | +RD7.2 |
| | CD-322916 | 132KV B020 UGF RELAY PANEL -1 | +RD2.1 |
| | | 132KV B02D UGF RELAY PANEL -2 | +RD2.2 |
| | CD-322919 | 132KV B710 UGF RELAY PANEL -1 | +RD3.1 |
| | | 132KV B71D UGF RELAY PANEL -2 | +RD3.2 |
| | CD-322925 | 132KV SPARE-2 UGF RELAY PANEL -1 | +RD6.1 |
| | | 132KV SPARE-2 UGF RELAY PANEL -2 | +RD6.2 |
| | CD-323D12 | 132KV FDIP PANEL | +FDIP |
| | CD-322946 | 132kV BUS COUPLER-A | +R13D |
| | CD-32294B | 132kV BUS COUPLER-B | +R23D |
| | CD-32295D | 132kV BUS SECTIDN | +R120 |
| | CD-322991 | 132kV BUSBAR PROTECTION MAIN-1 CENTRAL UNIT PANEL | +BBP1-1 |
| | CD-322993 | 132kV BUSBAR PROTECTION MAIN-1 BAY UNIT PANEL | +BBP1-2 |
| | CD-322995 | 132kV BUSBAR PRDTECTIDN MAIN-1 BAY UNIT PANEL | +BBP1-3 |
| | CD-322997 | 132kV BUSBAR PRDTECTIDN MAIN-1 BAY UNIT PANEL | +BBP1-4 |
| | CD-322999 | 132kV BUSBAR PRDTECTIDN MAIN-1 BAY UNIT PANEL | +BBP1-5 |
| | CD-323001 | 132kV BUSBAR PROTECTION MAIN-2 CENTRAL UNIT PANEL | +BBP2-1 |
| | CD-323DD3 | 132kV BUSBAR PRDTECTIDN MAIN-2 BAY UNIT PANEL | +BBP2-5 |
| | CD-323DD5 | 132kV BUSBAR PROTECTION MAIN-2 BAY UNIT PANEL | +BBP2-3 |
| | CD-323DD7 | 132kV BUSBAR PROTECTION MAIN-2 BAY UNIT PANEL | +BBP2-4 |
| | CD-323009 | 132kV BUSBAR PROTECTION MAIN-2 BAY UNIT PANEL | +BBP2-5 |

AS-BUILT BY _____ DATE _____ | CDNTRACT ND. 11131113/00 | JDB DRDER ND. S-13656

| REV. NO. | DATE | DESCRIPTION |
|---|---|---|
| 01 | 13 49 | FACTORY ASBUILT |
| 00 | 13 05 | FOR APPROVAL |

DRAWN BY RIZ CHECKED BY KVR
DATE STARTED 30.01.2013 DATE COMPLETED _____
DPRG. DEPT. CTPD ENG. DEPT. AUT-PSAC

DRAWING REFERENCES
132KV BUSBAR PROTN.MAIN-2 BU PANEL +BBP2-5
S/S 8709 - 132/13.8KV IN AL-KHARJ CITY
RIYADH SAUDI ARABIA

الشركة الوطنية لنقل الكهرباء
نقل الكهرباء
National Grid SA

| INDEX | PLANT NO. | DRAWING NUMBER | SHEET NO. SHT | SHEET NO. CONT. | REV. NO. |
|---|---|---|---|---|---|
| - | C421 | CD-323009 | 015 | 016 | 01 |

NG/D2-D (2012/01)
DMS VECTOR NGD200

THIS DRAWING AND THE INFORMATION CONTAINED HEREIN ARE THE SOLE PROPERTY OF NationalGrid SA NO REPRODUCTION IN FULL OR IN PART SHALL BE OBTAINED FROM THIS DOCUMENT WITHOUT THE WRITTEN CONSENT OF ITS OWNER.

| MANUFACTURER | SCHEMATICS DWG.NO | PANEL DESCRIPITION | PANEL REFERENCE |
|---|---|---|---|
| ABB<br>PROTECTION & SUBSTATION AUTOMATION | | SS 8709 13.8KV RELAY PANELS | |
| | CD-322952 | 13.8KV Capacitor Bank-1 Protection Panel | +CBP-1 |
| | CD-322954 | 13.8KV Capacitor Bank-2 Protection Panel | +CBP-2 |
| | CD-322956 | 13.8KV Capacitor Bank-2 Protection Panel | +CBP-3 |
| | CD-322958 | 13.8 KV ACCS PANEL | +ACCS |
| | CD-322962 | 13.8KV ACSE PANEL | +ACSE |
| | CD-322968 | 13.8KV Under Voltage Load Shedding Panel | +UVLS |
| | CD-322964 | 13.8KV Under Frequency Load Shedding Panel-1 | +UFLS01 |
| | CD-322966 | 13.8KV Under Frequency Load Shedding Panel-2 | +UFLS02 |
| | | | |
| | | | |
| | | | |
| | | | |
| | | | |
| | | | |
| | | | |

AS-BUILT BY _____ DATE _____ | CONTRACT NO. 11131113/00 | JDB ORDER NO. S-13656

| REV. NO. | DATE | DESCRIPTION |
|---|---|---|
| 01 | 13 49 | FACTORY ASBUILT |
| 00 | 13 05 | FOR APPROVAL |

DRAWN BY RIZ CHECKED BY KVR
DATE STARTED 30.01.2013 DATE COMPLETED _____
DPRG. DEPT. CTPD ENG. DEPT. AUT-PSAC

DRAWING REFERENCES
132KV BUSBAR PROTN.MAIN-2 BU PANEL +BBP2-5
S/S 8709 - 132/13.8KV IN AL-KHARJ CITY
RIYADH SAUDI ARABIA

الشركة الوطنية لنقل الكهرباء
نقل الكهرباء
National Grid SA

| INDEX | PLANT NO. | DRAWING NUMBER | SHEET NO. SHT | SHEET NO. CONT. | REV. NO. |
|---|---|---|---|---|---|
| - | C421 | CD-323009 | 016 | 051 | 01 |

NG/D2-D (2012/01)
DMS VECTOR NGD200

THIS DRAWING AND THE INFORMATION CONTAINED HEREIN ARE THE SOLE PROPERTY OF NationalGrid SA NO REPRODUCTION IN FULL OR IN PART SHALL BE OBTAINED FROM THIS DOCUMENT WITHOUT THE WRITTEN CONSENT OF ITS OWNER.

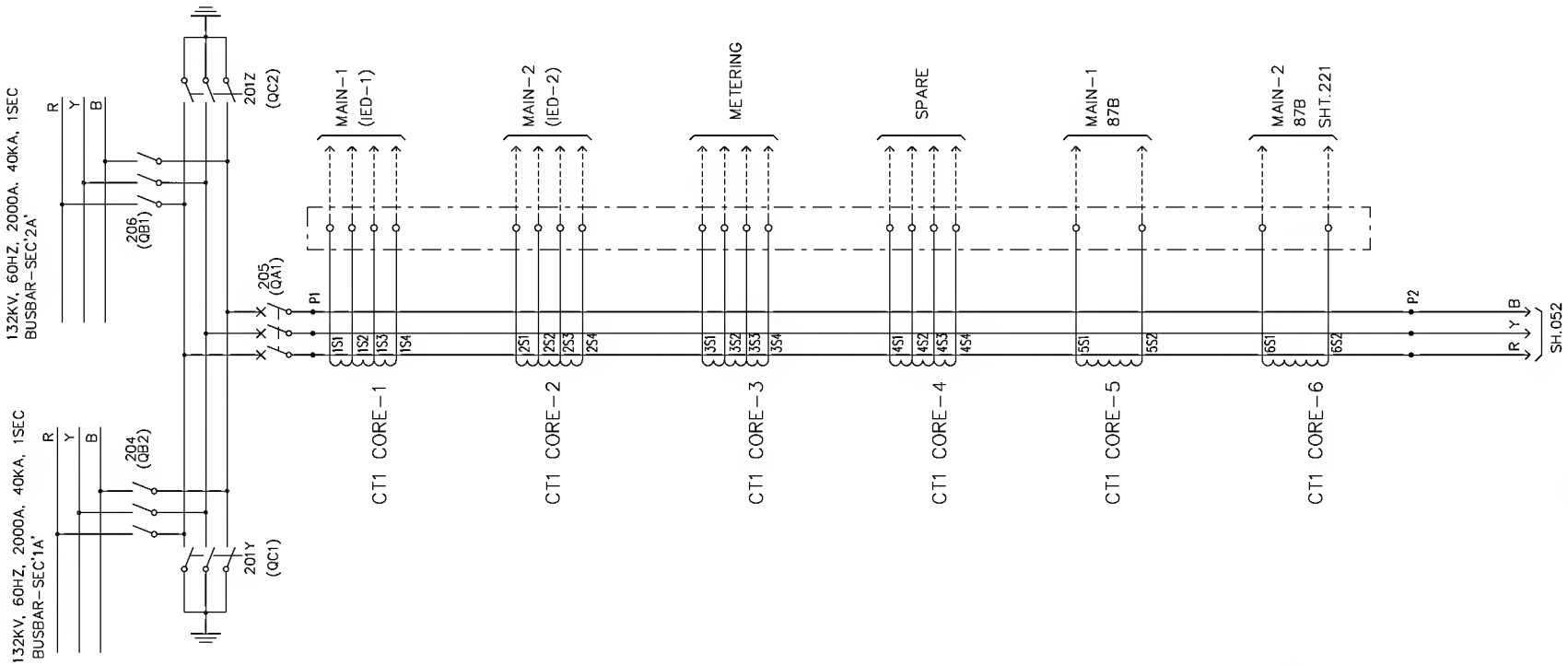


| CT | RATIO | CLASS | VK IN VOLTS | IMAG @ VK IN mA | RCT IN (OHMS) | BURDEN IN VA | FUNCTION |
|---|---|---|---|---|---|---|---|
| CT1-1 | 1600-1200-800/1A | X | >1400 | ≤100 | ≤2 | – | MAIN-1(IED-1) |
| CT1-2 | 1600-1200-800/1A | X | >1400 | ≤100 | ≤2 | – | MAIN-2(IED-2) |
| CT1-3 | 1600-1200-800/1A | X | >1400 | ≤100 | ≤2 | – | METERING |
| CT1-4 | 1600-1200-800/1A | X | >1400 | ≤100 | ≤2 | – | SPARE |
| CT1-5 | 2000/1A | X | >600 | ≤25 | ≤5 | – | 87B MAIN-1 |
| CT1-6 | 2000/1A | X | >600 | ≤25 | ≤5 | – | 87B MAIN-2 |

AS-BUILT BY _____ DATE _____ | CONTRACT NO. 11131113/00 | JOB ORDER NO. S-13656

| REV. NO. | DATE | DESCRIPTION |
|---|---|---|
| 01 | 13 49 | FACTORY ASBUILT |
| 00 | 13 05 | FOR APPROVAL |

DRAWN BY RIZ CHECKED BY KVR
DATE STARTED 30.01.2013 DATE COMPLETED _____
DPRG. DEPT. CTPD ENG. DEPT. AUT-PSAC

PRIMARY SYSTEM (8020 UGF BAY-002)
132KV BUSBAR PROTN.MAIN-2 BU PANEL +BBP2-5
S/S 8709 - 132/13.8KV IN AL-KHARJ CITY
RIYADH SAUDI ARABIA

الشركة الوطنية لنقل الكهرباء
نقل الكهرباء
National Grid SA

| INDEX | PLANT NO. | DRAWING NUMBER | SHEET NO. SHT | SHEET NO. CONT. | REV. NO. |
|---|---|---|---|---|---|
| - | C421 | CD-323009 | 051 | 052 | 01 |

NG/D2-D (2012/01)
DMS VECTOR NGD200

THIS DRAWING AND THE INFORMATION CONTAINED HEREIN ARE THE SOLE PROPERTY OF NationalGrid SA NO REPRODUCTION IN FULL OR IN PART SHALL BE OBTAINED FROM THIS DOCUMENT WITHOUT THE WRITTEN CONSENT OF ITS OWNER.

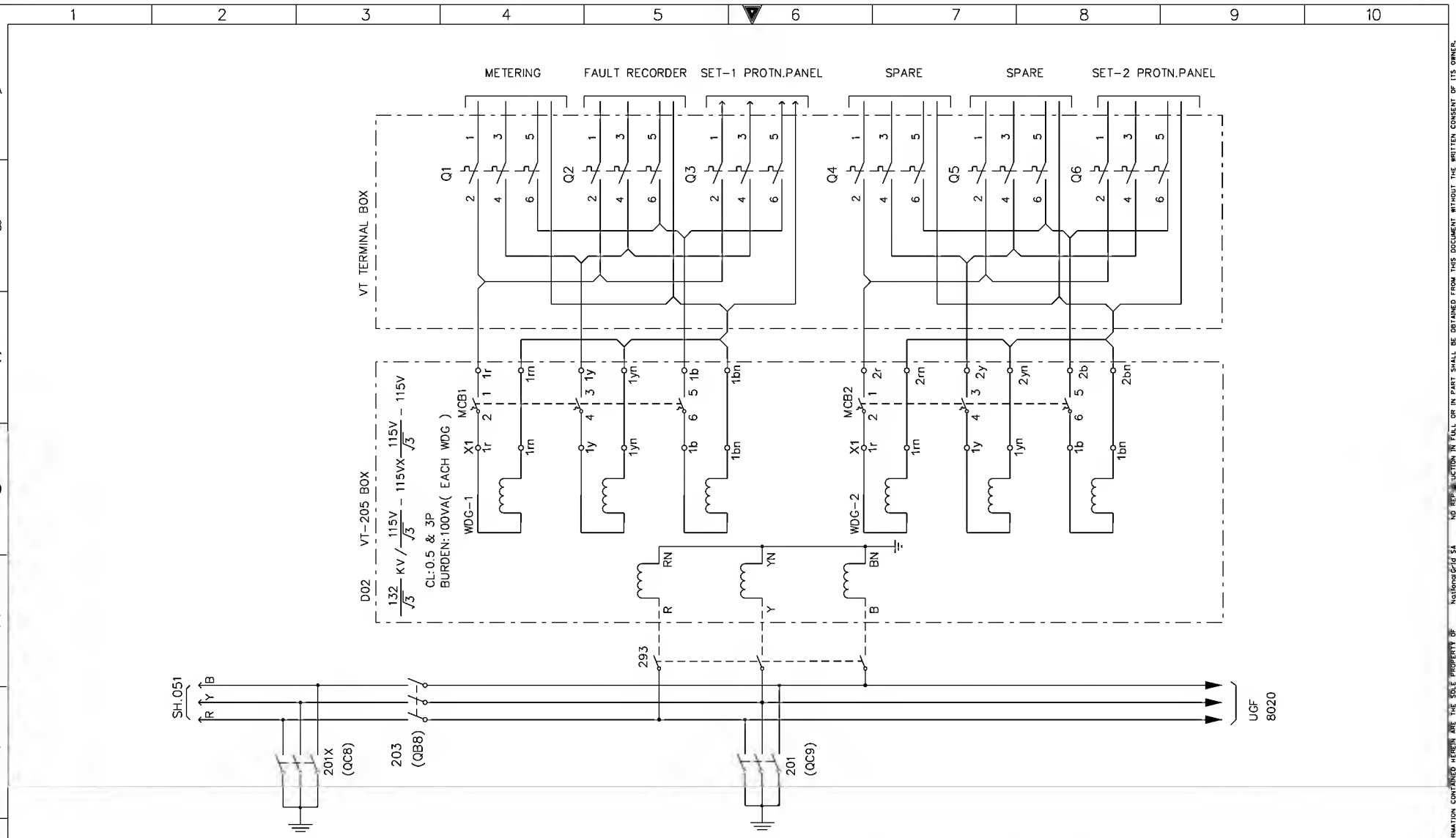


| AS-BUILT BY _____ DATE _____ | CONTRACT NO. 11131113/00 | JOB ORDER NO. S-13656 |
|---|---|---|

| REV. NO. | DATE | DESCRIPTION |
|---|---|---|
| 01 | 13 49 | FACTORY ASBUILT |
| 00 | 13 05 | FOR APPROVAL |

DRAWN BY RIZ CHECKED BY KVR
DATE STARTED 30.01.2013 DATE COMPLETED _____
OPRG. DEPT. CTPD ENG. DEPT. AUT-PSAC

PRIMARY SYSTEM (8020 UGF BAY-D02)
132KV BUSBAR PROTN.MAIN-2 BU PANEL +BBP2-5
S/S 8709 - 132/13.8KV IN AL-KHARJ CITY
RIYADH SAUDI ARABIA

الشركة الوطنية لنقل الكهرباء
نقل الكهرباء
National Grid SA

| INDEX | PLANT NO. | DRAWING NUMBER | SHEET NO. SHT | SHEET NO. CONT. | REV. NO. |
|---|---|---|---|---|---|
| - | C421 | CD-323009 | 052 | 053 | 01 |

NG/D2-D (2012/01)
DMS VECTOR NGD200

THIS DRAWING AND THE INFORMATION CONTAINED HEREIN ARE THE SOLE PROPERTY OF NationalGrid SA NO REPRODUCTION IN FULL OR IN PART SHALL BE OBTAINED FROM THIS DOCUMENT WITHOUT THE WRITTEN CONSENT OF ITS OWNER.

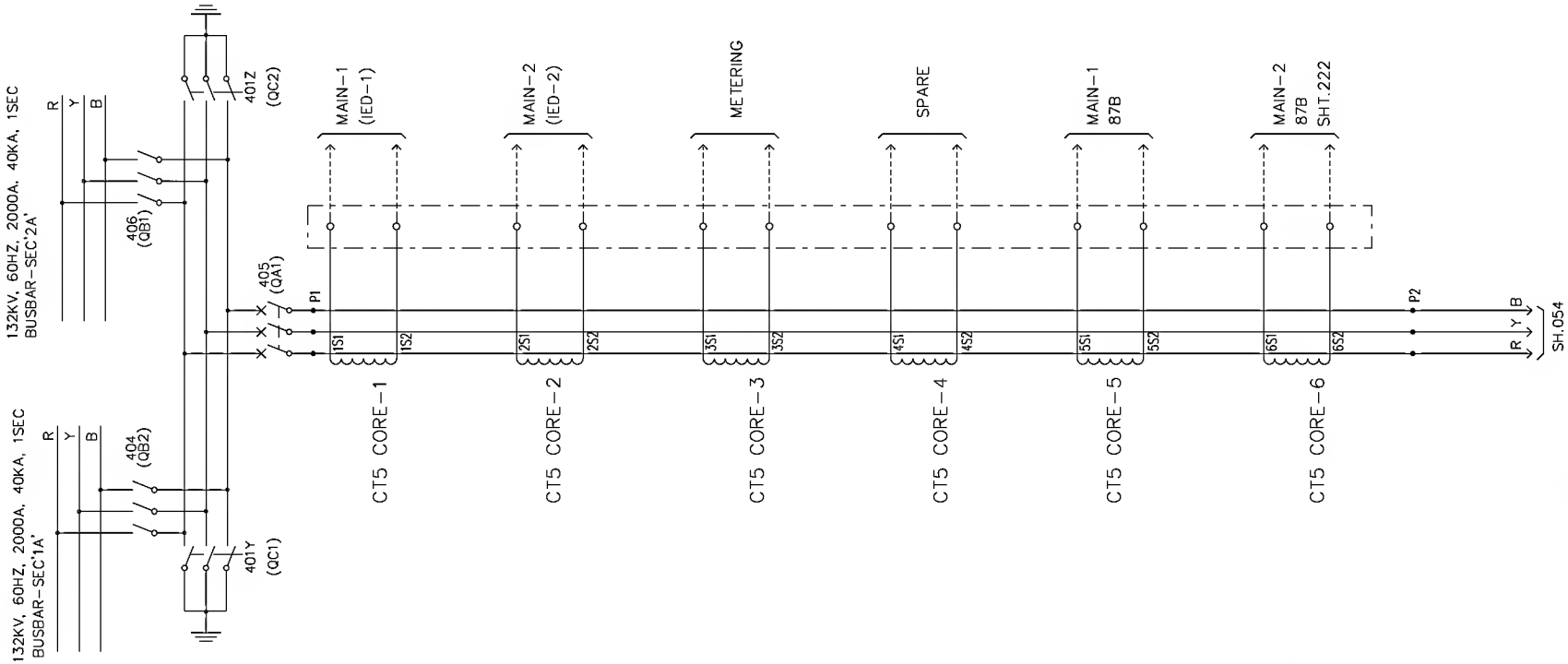


| CT | RATIO | CLASS | VK IN VOLTS | IMAG @ VK IN mA | RCT IN (OHMS) | BURDEN IN VA | FUNCTION |
|---|---|---|---|---|---|---|---|
| CT5-1 | 300/1A | X | >360 | ≤50 | ≤1 | – | MAIN-1(IED-1) TRAFO PROTN. |
| CT5-2 | 300/1A | X | >360 | ≤50 | ≤1 | – | MAIN-2(IED-2) TRAFO PROTN. |
| CT5-3 | 300/1A | 0.2Fs5 | – | – | – | 30 | METERING |
| CT5-4 | 300/1A | 5P20 | – | – | – | 30 | SPARE |
| CT5-5 | 2000/1A | X | >600 | ≤25 | ≤5 | – | 87B MAIN-1 |
| CT5-6 | 2000/1A | X | >600 | ≤25 | ≤5 | – | 87B MAIN-2 |

AS-BUILT BY _____ DATE _____ | CONTRACT NO. 11131113/00 | JOB ORDER NO. S-13656

| REV. NO. | DATE | DESCRIPTION |
|---|---|---|
| 01 | 13 49 | FACTORY ASBUILT |
| 00 | 13 05 | FOR APPROVAL |

DRAWN BY RIZ CHECKED BY KVR
DATE STARTED 30.01.2013 DATE COMPLETED _____
DPRG. DEPT. CTPD ENG. DEPT. AUT-PSAC

PRIMARY SYSTEM (TRANSFORMER- GT3 BAY-D04)
132KV BUSBAR PROTN.MAIN-2 BU PANEL +BBP2-5
S/S 8709 - 132/13.8KV IN AL-KHARJ CITY
RIYADH SAUDI ARABIA

الشركة الوطنية لنقل الكهرباء
نقل الكهرباء
National Grid SA

| INDEX | PLANT NO. | DRAWING NUMBER | SHEET NO. SHT | SHEET NO. CONT. | REV. NO. |
|---|---|---|---|---|---|
| - | C421 | CD-323009 | 053 | 054 | 01 |

NG/D2-D (2012/01)
DMS VECTOR NGD200

THIS DRAWING AND THE INFORMATION CONTAINED HEREIN ARE THE SOLE PROPERTY OF NationalGrid SA NO REPRODUCTION IN FULL OR IN PART SHALL BE OBTAINED FROM THIS DOCUMENT WITHOUT THE WRITTEN CONSENT OF ITS OWNER.

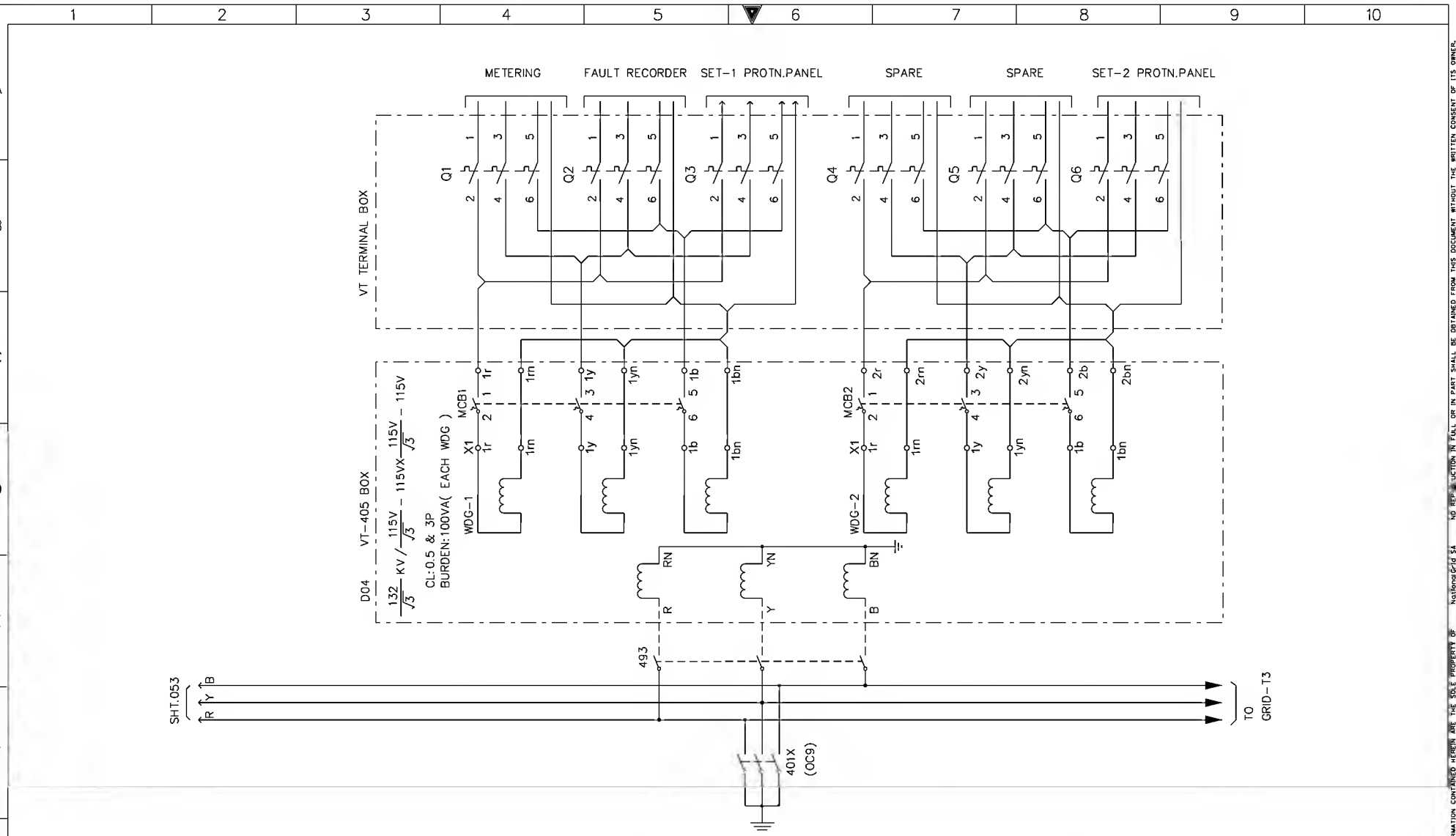


| AS-BUILT BY _____ DATE _____ | CONTRACT NO. 11131113/00 | JOB ORDER NO. S-13656 |
|---|---|---|

| REV. NO. | DATE | DESCRIPTION |
|---|---|---|
| 01 | 13 49 | FACTORY ASBUILT |
| 00 | 13 05 | FOR APPROVAL |

DRAWN BY RIZ CHECKED BY KVR
DATE STARTED 30.01.2013 DATE COMPLETED _____
OPRG. DEPT. CTPD ENG. DEPT. AUT-PSAC

PRIMARY SYSTEM (TRANSFORMER- GT3 BAY-D04)
132KV BUSBAR PROTN.MAIN-2 BU PANEL +BBP2-5
S/S 8709 - 132/13.8KV IN AL-KHARJ CITY
RIYADH SAUDI ARABIA

الشركة الوطنية لنقل الكهرباء
نقل الكهرباء
National Grid SA

| INDEX | PLANT NO. | DRAWING NUMBER | SHEET NO. SHT | SHEET NO. CONT. | REV. NO. |
|---|---|---|---|---|---|
| - | C421 | CD-323009 | 054 | 055 | 01 |

NG/D2-D (2012/01)
DMS VECTOR NGD200

THIS DRAWING AND THE INFORMATION CONTAINED HEREIN ARE THE SOLE PROPERTY OF NationalGrid SA NO REPRODUCTION IN FULL OR IN PART SHALL BE OBTAINED FROM THIS DOCUMENT WITHOUT THE WRITTEN CONSENT OF ITS OWNER.

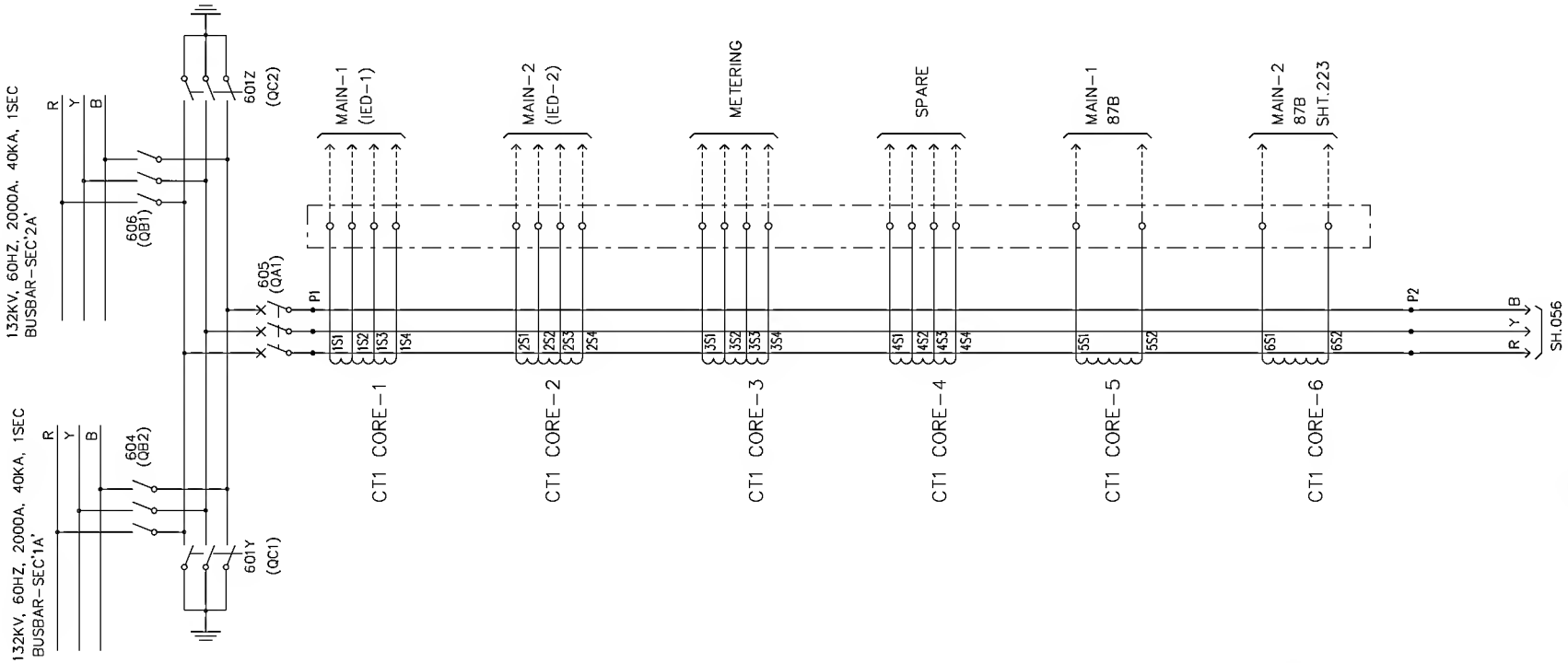


| CT | RATIO | CLASS | VK IN VOLTS | IMAG @ VK IN mA | RCT IN (OHMS) | BURDEN IN VA | FUNCTION |
|---|---|---|---|---|---|---|---|
| CT1-1 | 1600-1200-800/1A | X | >1400 | ≤100 | ≤2 | – | MAIN-1(IED-1) |
| CT1-2 | 1600-1200-800/1A | X | >1400 | ≤100 | ≤2 | – | MAIN-2(IED-2) |
| CT1-3 | 1600-1200-800/1A | X | >1400 | ≤100 | ≤2 | – | METERING |
| CT1-4 | 1600-1200-800/1A | X | >1400 | ≤100 | ≤2 | – | SPARE |
| CT1-5 | 2000/1A | X | >600 | ≤25 | ≤5 | – | 87B MAIN-1 |
| CT1-6 | 2000/1A | X | >600 | ≤25 | ≤5 | – | 87B MAIN-2 |

AS-BUILT BY _____ DATE _____ | CONTRACT NO. 11131113/00 | JOB ORDER NO. S-13656

| REV. NO. | DATE | DESCRIPTION |
|---|---|---|
| 01 | 13 49 | FACTORY ASBUILT |
| 00 | 13 05 | FOR APPROVAL |

DRAWN BY RIZ CHECKED BY KVR
DATE STARTED 30.01.2013 DATE COMPLETED _____
DPRG. DEPT. CTPD ENG. DEPT. AUT-PSAC

PRIMARY SYSTEM (SPARE-2 UGF BAY-D06)
132KV BUSBAR PROTN.MAIN-2 BU PANEL +BBP2-5
S/S 8709 - 132/13.8KV IN AL-KHARJ CITY
RIYADH SAUDI ARABIA

الشركة الوطنية لنقل الكهرباء
نقل الكهرباء
National Grid SA

| INDEX | PLANT NO. | DRAWING NUMBER | SHEET NO. SHT | SHEET NO. CONT. | REV. NO. |
|---|---|---|---|---|---|
| - | C421 | CD-323009 | 055 | 056 | 01 |

NG/D2-D (2012/01)
DMS VECTOR NGD200

THIS DRAWING AND THE INFORMATION CONTAINED HEREIN ARE THE SOLE PROPERTY OF NationalGrid SA NO REPRODUCTION IN FULL OR IN PART SHALL BE OBTAINED FROM THIS DOCUMENT WITHOUT THE WRITTEN CONSENT OF ITS OWNER.

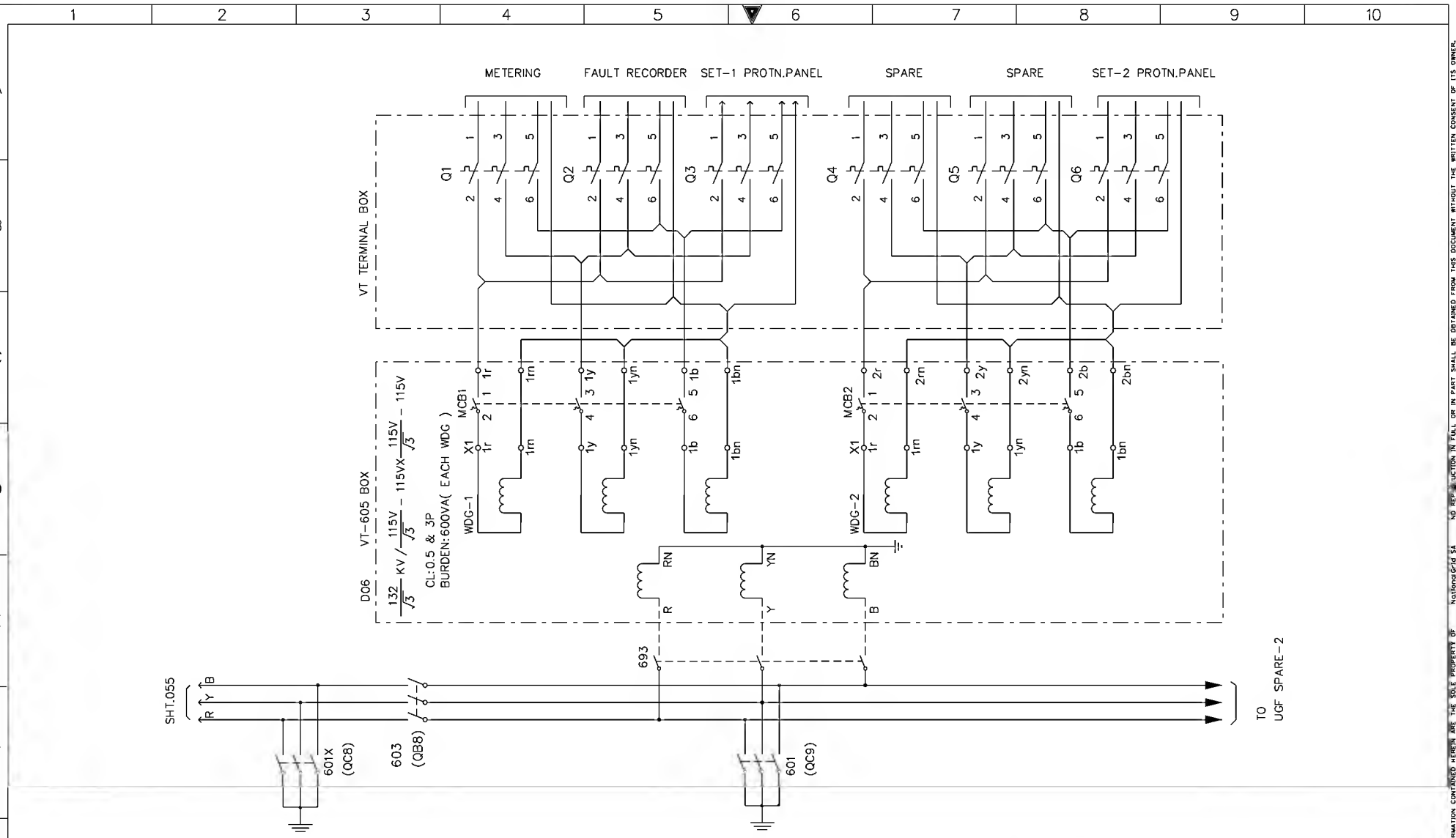


| AS-BUILT BY _____ DATE _____ | CONTRACT NO. 11131113/00 | JOB ORDER NO. S-13656 |
|---|---|---|

| REV. NO. | DATE | DESCRIPTION |
|---|---|---|
| 01 | 13 49 | FACTORY ASBUILT |
| 00 | 13 05 | FOR APPROVAL |

DRAWN BY RIZ CHECKED BY KVR
DATE STARTED 30.01.2013 DATE COMPLETED _____
OPRG. DEPT. CTPD ENG. DEPT. AUT-PSAC

PRIMARY SYSTEM (SPARE-2 UGF BAY-D06)
132KV BUSBAR PROTN.MAIN-2 BU PANEL +BBP2-5
S/S 8709 - 132/13.8KV IN AL-KHARJ CITY
RIYADH SAUDI ARABIA

الشركة الوطنية لنقل الكهرباء
نقل الكهرباء
National Grid SA

| INDEX | PLANT NO. | DRAWING NUMBER | SHEET NO. SHT | SHEET NO. CONT. | REV. NO. |
|---|---|---|---|---|---|
| - | C421 | CD-323009 | 056 | 211 | 01 |

NG/D2-D (2012/01)
DMS VECTOR NGD200

THIS DRAWING AND THE INFORMATION CONTAINED HEREIN ARE THE SOLE PROPERTY OF NationalGrid SA NO REPRODUCTION IN FULL OR IN PART SHALL BE OBTAINED FROM THIS DOCUMENT WITHOUT THE WRITTEN CONSENT OF ITS OWNER.

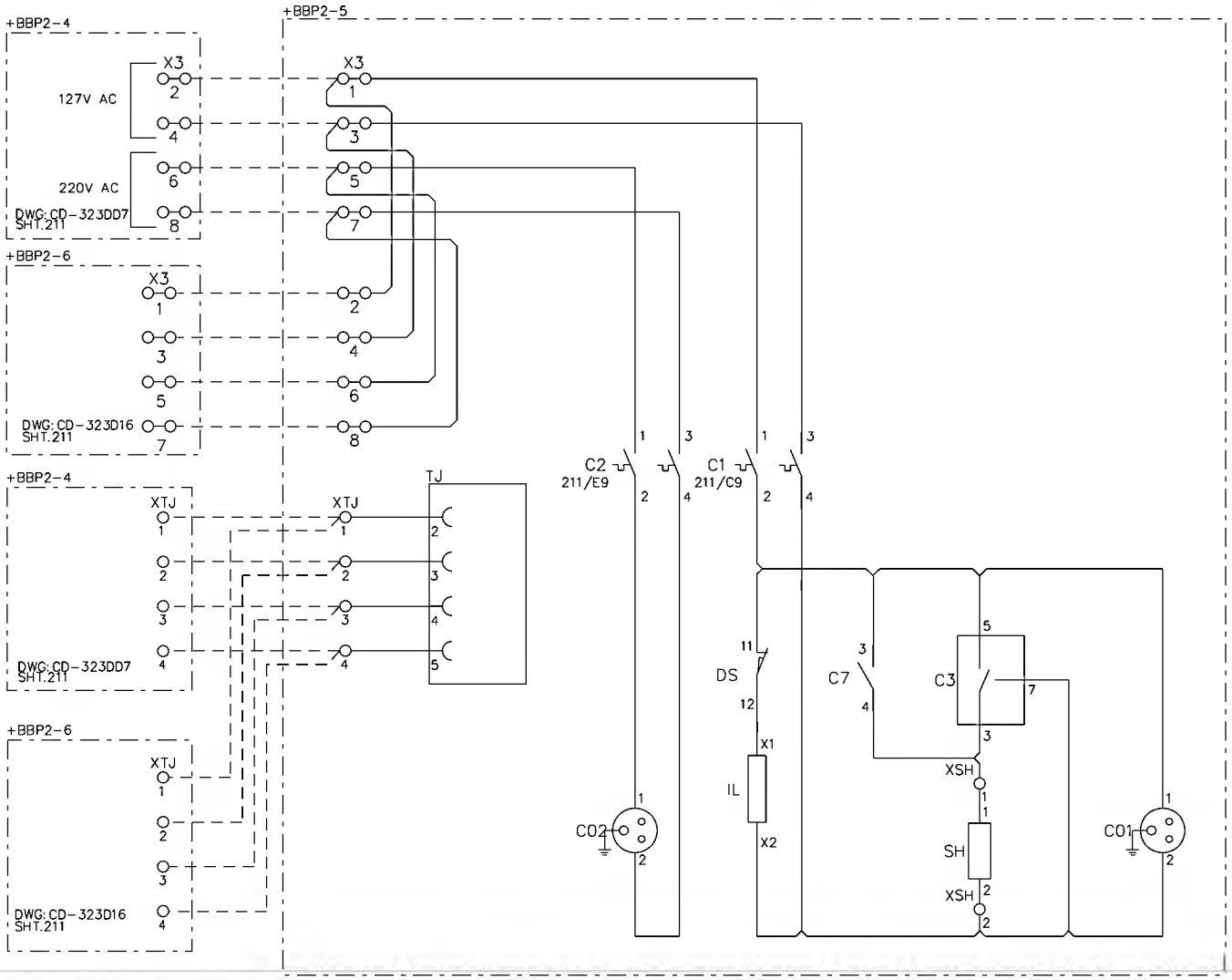


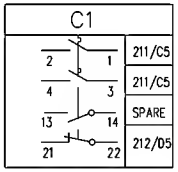


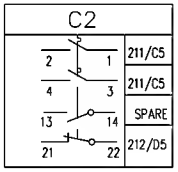


AS-BUILT BY _____ DATE _____ | CONTRACT NO. 11131113/00 | JOB ORDER NO. S-13656

| REV. NO. | DATE | DESCRIPTION |
|---|---|---|
| 01 | 13 49 | FACTORY ASBUILT |
| 00 | 13 05 | FOR APPROVAL |

DRAWN BY RIZ CHECKED BY KVR
DATE STARTED 30.01.2013 DATE COMPLETED _____
DPRG. DEPT. CTPD ENG. DEPT. AUT-PSAC

AC SUPPLY FOR ILLUMINATION &POWER SOCKET
132KV BUSBAR PROTN.MAIN-2 BU PANEL +BBP2-5
S/S 8709 - 132/13.8KV IN AL-KHARJ CITY
RIYADH SAUDI ARABIA

الشركة الوطنية لنقل الكهرباء
نقل الكهرباء National Grid SA

| INDEX | PLANT NO. | DRAWING NUMBER | SHEET NO. SHT | SHEET NO. CONT. | REV. NO. |
|---|---|---|---|---|---|
| - | C421 | CD-323009 | 211 | 212 | 01 |

NG/D2-D (2012/01)
DMS VECTOR NGD200

THIS DRAWING AND THE INFORMATION CONTAINED HEREIN ARE THE SOLE PROPERTY OF NationalGrid SA NO REPRODUCTION IN FULL OR IN PART SHALL BE OBTAINED FROM THIS DOCUMENT WITHOUT THE WRITTEN CONSENT OF ITS OWNER.

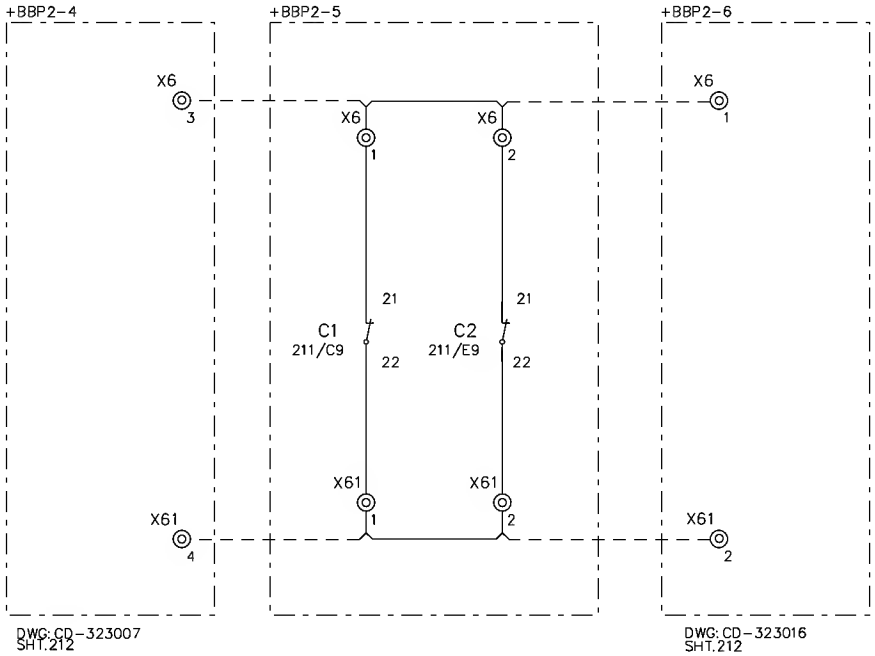


| | | | | |
|---|---|---|---|---|
| AS-BUILT BY _____ DATE _____ | CONTRACT NO. 11131113/00 | JOB ORDER NO. S-13656 | CUB.LIGHTING,HEATER&SOKET ALARM CKT. | |
| | | | 132KV BUSBAR PROTN.MAIN-2 BU PANEL +BBP2-5 | |
| 01 | 13 49 | FACTORY ASBUILT | S/S 8709 - 132/13.8KV IN AL-KHARJ CITY | |
| 00 | 13 05 | FOR APPROVAL | RIYADH SAUDI ARABIA | |
| REV. NO. | DATE | DESCRIPTION | | |

DRAWN BY RIZ CHECKED BY KVR
DATE STARTED 30.01.2013 DATE COMPLETED _____
ORG. DEPT. CTPD ENG. DEPT. AUT-PSAC

الشركة الوطنية لنقل الكهرباء
نقل الكهرباء
National Grid SA

| INDEX | PLANT NO. | DRAWING NUMBER | SHEET NO. SHT | SHEET NO. CONT. | REV. NO. |
|---|---|---|---|---|---|
| - | C421 | CD-323009 | 212 | 216 | 01 |

NG/D2-0 (2012/01)
DMS VECTOR NGD200

THIS DRAWING AND THE INFORMATION CONTAINED HEREIN ARE THE SOLE PROPERTY OF NationalGrid SA NO REPRODUCTION IN FULL OR IN PART SHALL BE OBTAINED FROM THIS DOCUMENT WITHOUT THE WRITTEN CONSENT OF ITS OWNER.

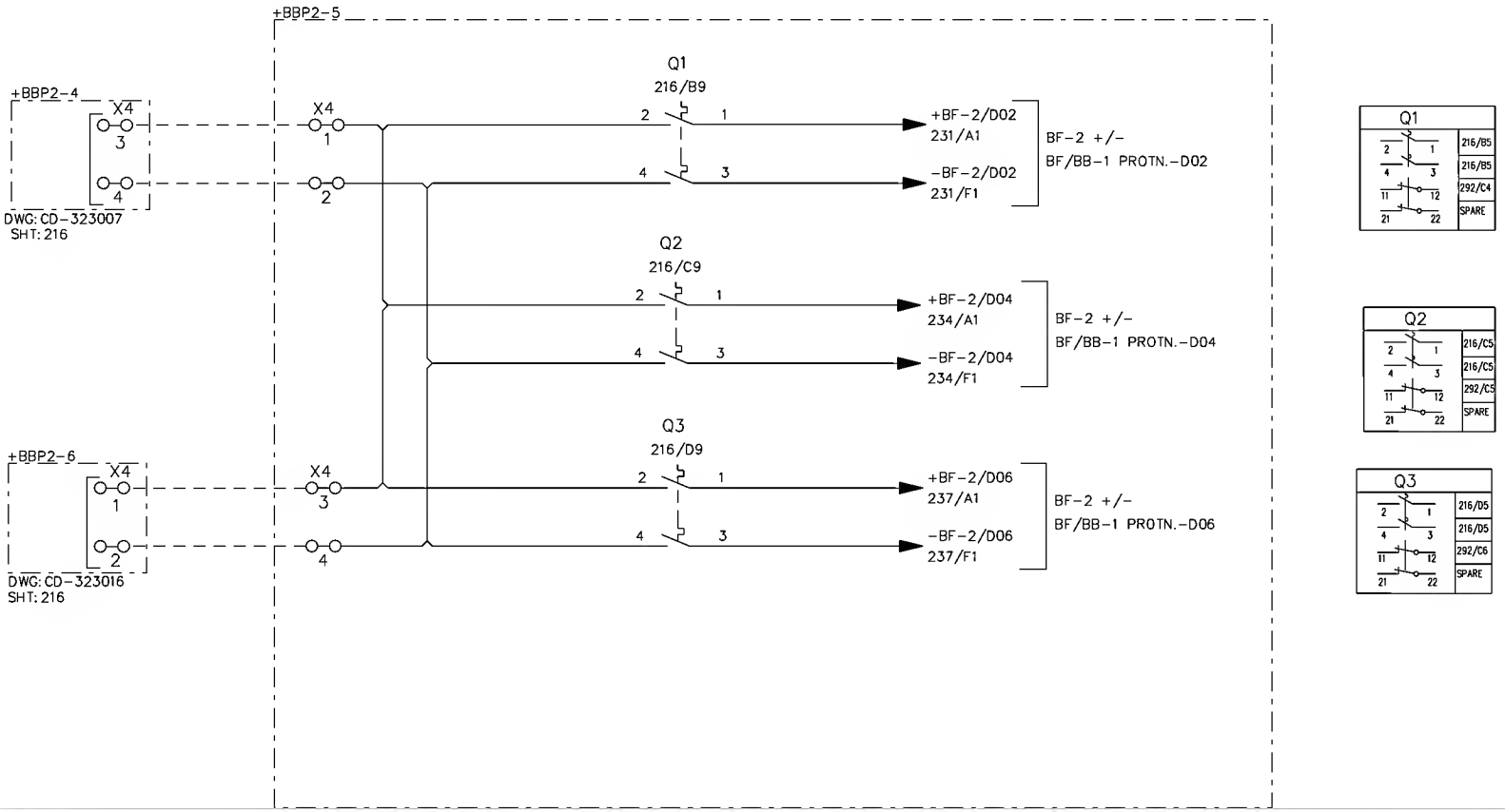


| AS-BUILT BY _____ DATE _____ | CONTRACT NO. 11131113/00 | JOB ORDER NO. S-13656 |
|---|---|---|

| REV. NO. | DATE | DESCRIPTION |
|---|---|---|
| 01 | 13 49 | FACTORY ASBUILT |
| 00 | 13 05 | FOR APPROVAL |

DRAWN BY RIZ CHECKED BY KVR
DATE STARTED 30.01.2013 DATE COMPLETED _____
DPRG. DEPT. CTPD ENG. DEPT. AUT-PSAC

DC SUPPLY DISTRIBUTION
132KV BUSBAR PROTN.MAIN-2 BU PANEL +BBP2-5
S/S 8709 - 132/13.8KV IN AL-KHARJ CITY
RIYADH SAUDI ARABIA

الشركة الوطنية لنقل الكهرباء
نقل الكهرباء
National Grid SA

| INDEX | PLANT NO. | DRAWING NUMBER | SHEET NO. SHT | SHEET NO. CONT. | REV. NO. |
|---|---|---|---|---|---|
| - | C421 | CD-323009 | 216 | 221 | 01 |

NG/D2-D (2012/01)
DMS VECTOR NGD200

THIS DRAWING AND THE INFORMATION CONTAINED HEREIN ARE THE SOLE PROPERTY OF NationalGrid SA NO REPRODUCTION IN FULL OR IN PART SHALL BE OBTAINED FROM THIS DOCUMENT WITHOUT THE WRITTEN CONSENT OF ITS OWNER.

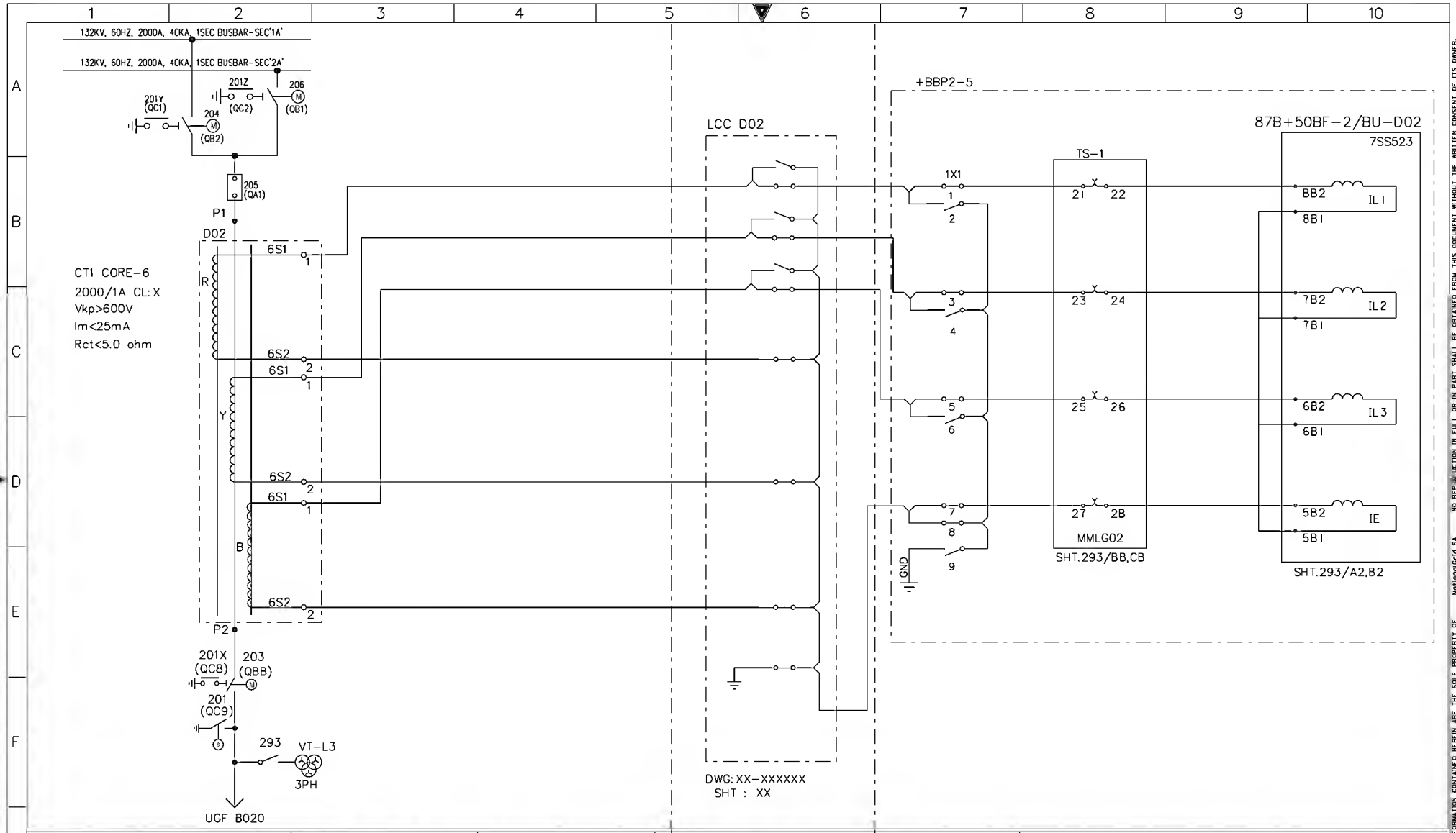


| AS-BUILT BY _____ DATE _____ | CONTRACT NO. 11131113/00 | JOB ORDER NO. S-13656 |
|---|---|---|

| REV. NO. | DATE | DESCRIPTION |
|---|---|---|
| 01 | 13 49 | FACTORY ASBUILT |
| 00 | 13 05 | FOR APPROVAL |

DRAWN BY RIZ CHECKED BY KVR
DATE STARTED 30.01.2013 DATE COMPLETED _____
DPRG. DEPT. CTPD ENG. DEPT. AUT-PSAC

CURRENT TRANSFORMER INPUTS -87B+50BF-2/BU-D02
132KV BUSBAR PROTN.MAIN-2 BU PANEL +BBP2-5
S/S 8709 - 132/13.8KV IN AL-KHARJ CITY
RIYADH SAUDI ARABIA

الشركة الوطنية لنقل الكهرباء
نقل الكهرباء
National Grid SA

| INDEX | PLANT NO. | DRAWING NUMBER | SHEET NO. SHT | SHEET NO. CONT. | REV. NO. |
|---|---|---|---|---|---|
| - | C421 | CD-323009 | 221 | 222 | 01 |

NG/D2-D (2012/01)
DMS VECTOR NGD200

THIS DRAWING AND THE INFORMATION CONTAINED HEREIN ARE THE SOLE PROPERTY OF NationalGrid SA NO REPRODUCTION IN FULL OR IN PART SHALL BE OBTAINED FROM THIS DOCUMENT WITHOUT THE WRITTEN CONSENT OF ITS OWNER.

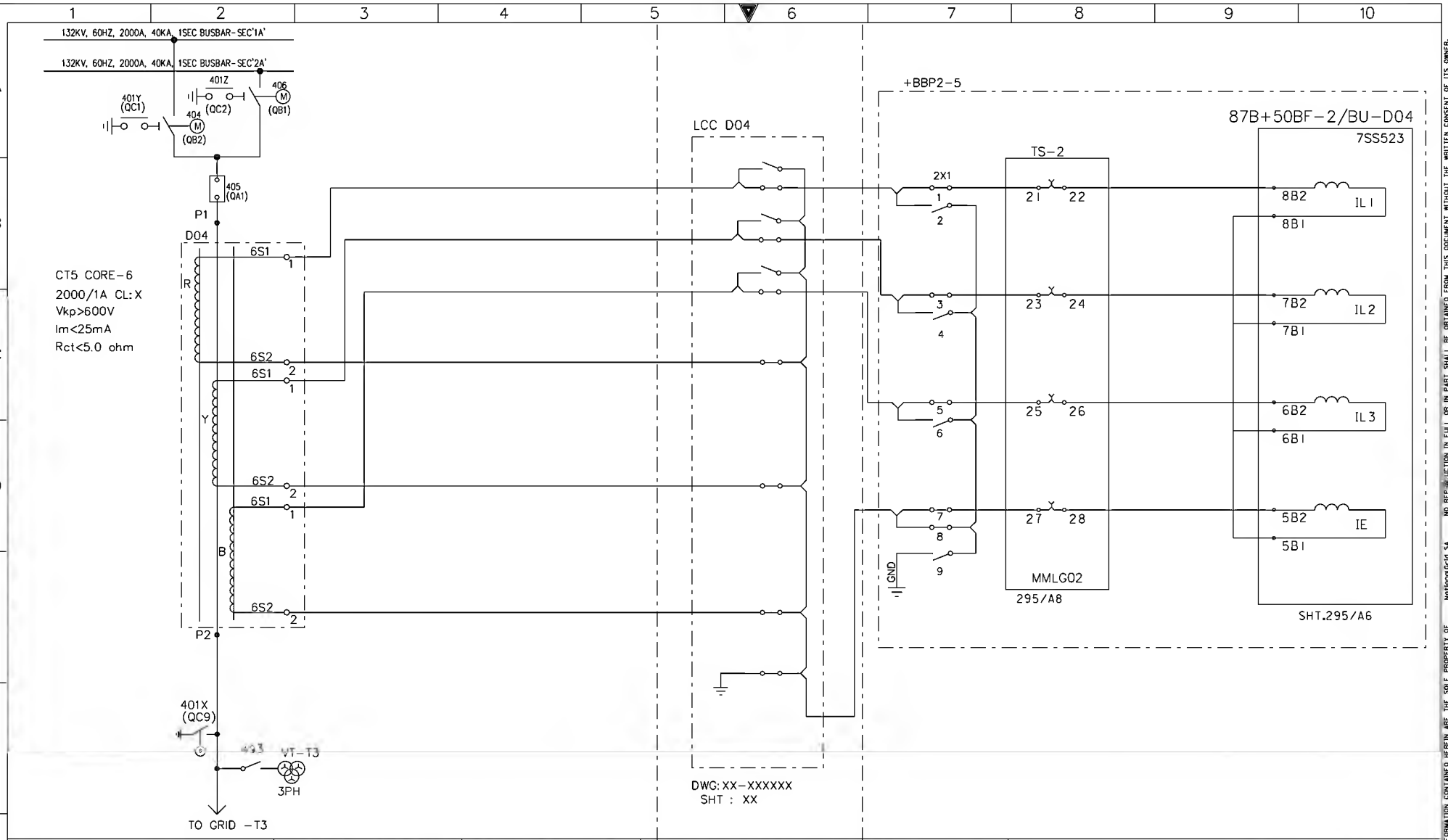


| AS-BUILT BY _____ DATE _____ | CONTRACT NO. 11131113/00 | JOB ORDER NO. S-13656 |
|---|---|---|

| REV. NO. | DATE | DESCRIPTION |
|---|---|---|
| 01 | 13 49 | FACTORY ASBUILT |
| 00 | 13 05 | FOR APPROVAL |

DRAWN BY RIZ CHECKED BY KVR
DATE STARTED 30.01.2013 DATE COMPLETED _____
DPRG. DEPT. CTPD ENG. DEPT. AUT-PSAC

CURRENT TRANSFORMER INPUTS -87B+50BF-2/BU-D04
132KV BUSBAR PROTN.MAIN-2 BU PANEL +BBP2-5
S/S 8709 - 132/13.8KV IN AL-KHARJ CITY
RIYADH SAUDI ARABIA

الشركة الوطنية لنقل الكهرباء
نقل الكهرباء
National Grid SA

| INDEX | PLANT NO. | DRAWING NUMBER | SHEET NO. SHT | SHEET NO. CONT. | REV. NO. |
|---|---|---|---|---|---|
| - | C421 | CD-323009 | 222 | 223 | 01 |

NG/D2-D (2012/01)
DMS VECTOR NGD200

THIS DRAWING AND THE INFORMATION CONTAINED HEREIN ARE THE SOLE PROPERTY OF NationalGrid SA NO REPRODUCTION IN FULL OR IN PART SHALL BE OBTAINED FROM THIS DOCUMENT WITHOUT THE WRITTEN CONSENT OF ITS OWNER.

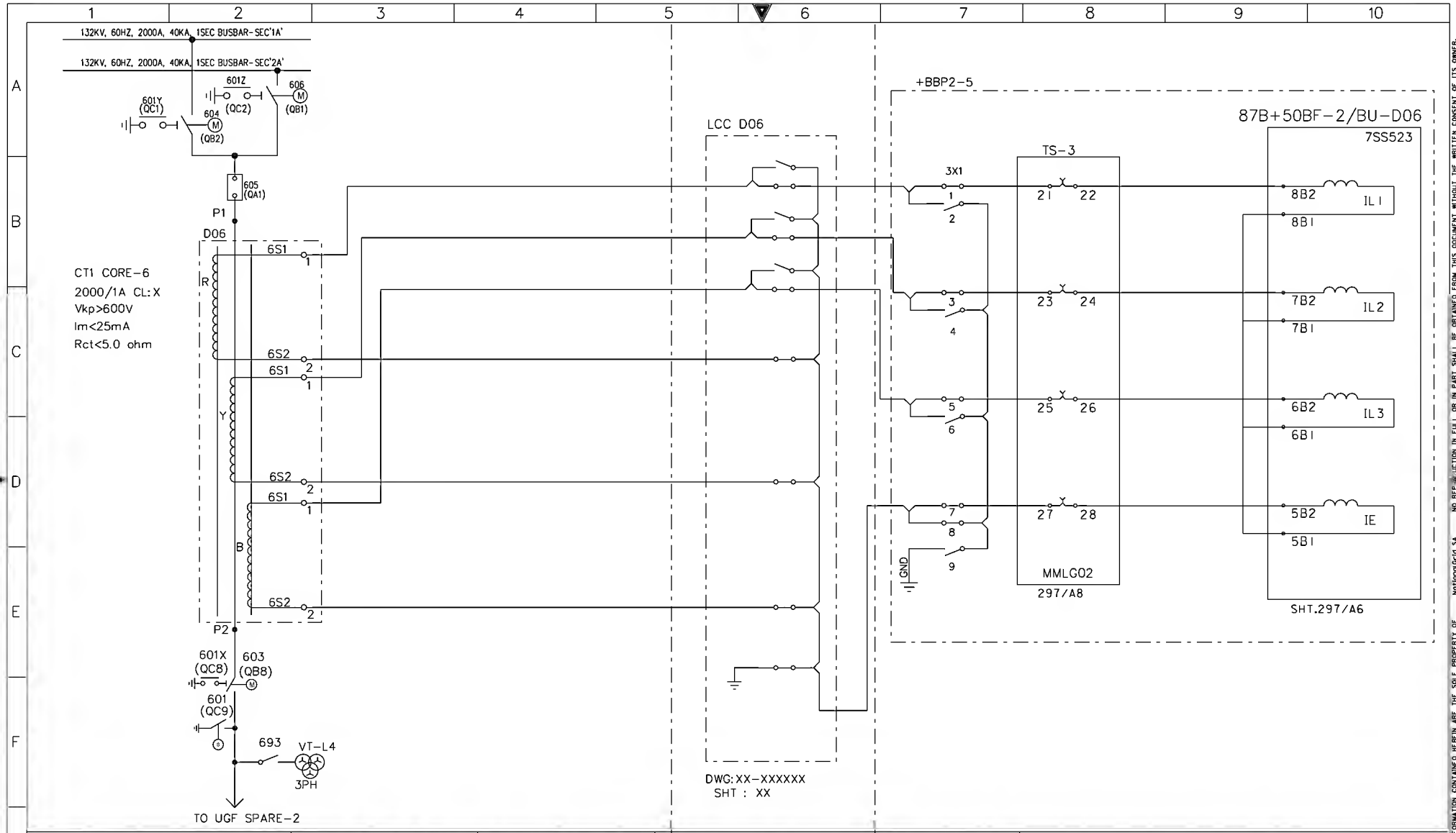


| AS-BUILT BY _____ DATE _____ | CONTRACT NO. 11131113/00 | JOB ORDER NO. S-13656 |
|---|---|---|

| REV. NO. | DATE | DESCRIPTION |
|---|---|---|
| 01 | 13 49 | FACTORY ASBUILT |
| 00 | 13 05 | FOR APPROVAL |

DRAWN BY RIZ CHECKED BY KVR
DATE STARTED 30.01.2013 DATE COMPLETED _____
DPRG. DEPT. CTPD ENG. DEPT. AUT-PSAC

CURRENT TRANSFORMER INPUTS -87B+50BF-2/BU-D06
132KV BUSBAR PROTN.MAIN-2 BU PANEL +BBP2-5
S/S 8709 - 132/13.8KV IN AL-KHARJ CITY
RIYADH SAUDI ARABIA

الشركة الوطنية لنقل الكهرباء
نقل الكهرباء
National Grid SA

| INDEX | PLANT NO. | DRAWING NUMBER | SHEET NO. SHT | SHEET NO. CONT. | REV. NO. |
|---|---|---|---|---|---|
| - | C421 | CD-323009 | 223 | 231 | 01 |

NG/D2-D (2012/01)
DMS VECTOR NGD200

THIS DRAWING AND THE INFORMATION CONTAINED HEREIN ARE THE SOLE PROPERTY OF NationalGrid SA NO REPRODUCTION IN FULL OR IN PART SHALL BE OBTAINED FROM THIS DOCUMENT WITHOUT THE WRITTEN CONSENT OF ITS OWNER.

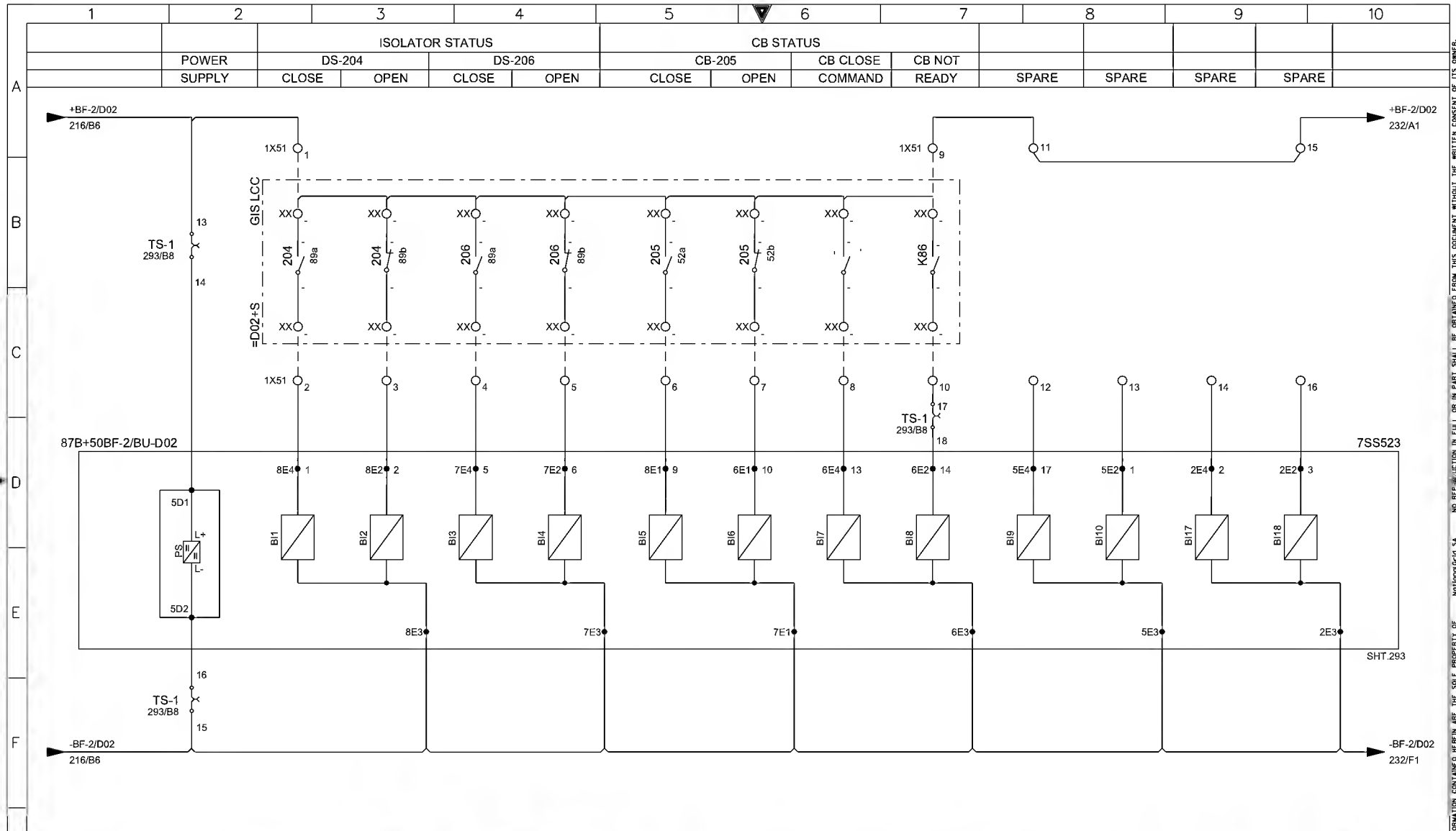


| | | | | | | | | | | | | | |
|---|---|---|---|---|---|---|---|---|---|---|---|---|---|
| | | ISOLATOR STATUS | | | | CB STATUS | | | | | | | |
| | POWER SUPPLY | DS-204 CLOSE | DS-204 OPEN | DS-206 CLOSE | DS-206 OPEN | CB-205 CLOSE | CB-205 OPEN | CB CLOSE COMMAND | CB NOT READY | SPARE | SPARE | SPARE | SPARE |

AS-BUILT BY _____ DATE _____ | CONTRACT NO. 11131113/00 | JOB ORDER NO. S-13656

| REV. NO. | DATE | DESCRIPTION |
|---|---|---|
| 01 | 13 49 | FACTORY ASBUILT |
| 00 | 13 05 | FOR APPROVAL |

DRAWN BY RIZ CHECKED BY KVR
DATE STARTED 30.01.2013 DATE COMPLETED _____
DPRG. DEPT. CTPD ENG. DEPT. AUT-PSAC

87B+50BF-2/BU-D02 PROTN. RELAY - BINARY INPUTS
132KV BUSBAR PROTN.MAIN-2 BU PANEL +BBP2-5
S/S 8709 - 132/13.8KV IN AL-KHARJ CITY
RIYADH SAUDI ARABIA

الشركة الوطنية لنقل الكهرباء
نقل الكهرباء
National Grid SA

| INDEX | PLANT NO. | DRAWING NUMBER | SHEET NO. SHT | SHEET NO. CONT. | REV. NO. |
|---|---|---|---|---|---|
| - | C421 | CD-323009 | 231 | 232 | 01 |

NG/D2-0 (2012/01)
DMS VECTOR NGD200

THIS DRAWING AND THE INFORMATION CONTAINED HEREIN ARE THE SOLE PROPERTY OF NationalGrid SA NO REPRODUCTION IN FULL OR IN PART SHALL BE OBTAINED FROM THIS DOCUMENT WITHOUT THE WRITTEN CONSENT OF ITS OWNER.

| BF INITIATION | | |
|---|---|---|
| MAIN-1 & 2 | | DC SUPPLY |
| PROTN. | | SUPERVISION |

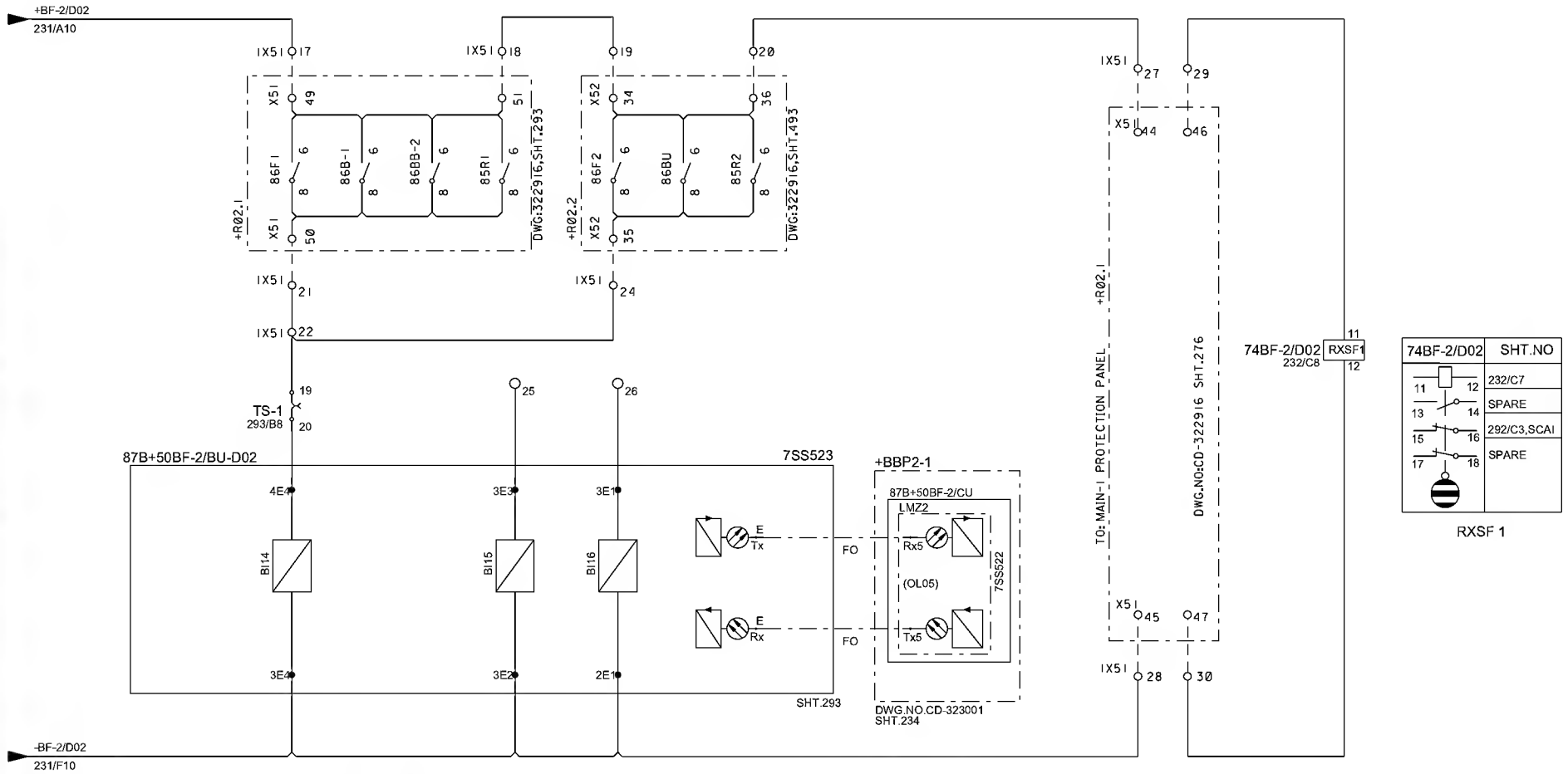


| AS-BUILT BY _____ DATE _____ | CONTRACT NO. 11131113/00 | JOB ORDER NO. S-13656 |
|---|---|---|

| REV. NO. | DATE | DESCRIPTION |
|---|---|---|
| 01 | 13 49 | FACTORY ASBUILT |
| 00 | 13 05 | FOR APPROVAL |

DRAWN BY RIZ CHECKED BY KVR
DATE STARTED 30.01.2013 DATE COMPLETED
DPRG. DEPT. CTPD ENG. DEPT. AUT-PSAC

87B+50BF-2/BU-D02 PROTN. RELAY - BINARY INPUTS
132KV BUSBAR PROTN.MAIN-2 BU PANEL +BBP2-5
S/S 8709 - 132/13.8KV IN AL-KHARJ CITY
RIYADH SAUDI ARABIA

الشركة الوطنية لنقل الكهرباء
نقل الكهرباء
National Grid SA

| INDEX | PLANT NO. | DRAWING NUMBER | SHEET NO. SHT | SHEET NO. CONT. | REV. NO. |
|---|---|---|---|---|---|
| - | C421 | CD-323009 | 232 | 233 | 01 |

NG/D2-0 (2012/01)
DMS VECTOR NGD200

THIS DRAWING AND THE INFORMATION CONTAINED HEREIN ARE THE SOLE PROPERTY OF NationalGrid SA NO REPRODUCTION IN FULL OR IN PART SHALL BE OBTAINED FROM THIS DOCUMENT WITHOUT THE WRITTEN CONSENT OF ITS OWNER.

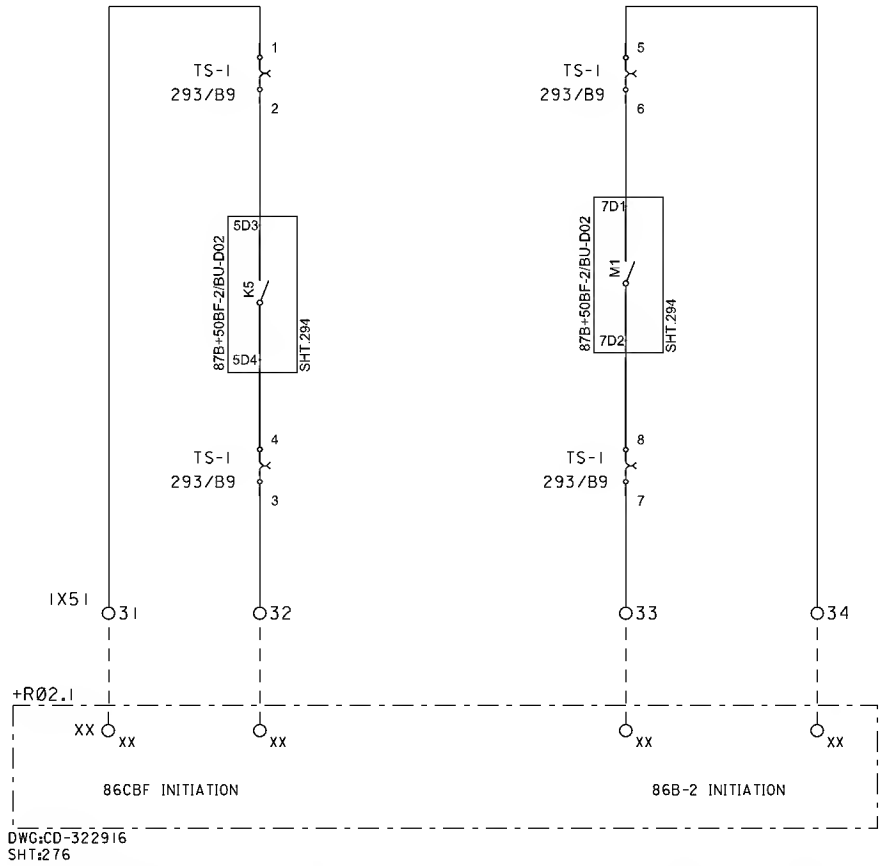


| AS-BUILT BY _____ DATE _____ | CONTRACT NO. 11131113/00 | JOB ORDER NO. S-13656 |
|---|---|---|

| REV. NO. | DATE | DESCRIPTION |
|---|---|---|
| 01 | 13 49 | FACTORY ASBUILT |
| 00 | 13 05 | FOR APPROVAL |

DRAWN BY RIZ CHECKED BY KVR
DATE STARTED 30.01.2013 DATE COMPLETED _____
DPRG. DEPT. CTPD ENG. DEPT. AUT-PSAC

CBF + BUSBAR PROTN.-2 TRIP RELAY CIRCUIT -D02
132KV BUSBAR PROTN.MAIN-2 BU PANEL +BBP2-5
S/S 8709 - 132/13.8KV IN AL-KHARJ CITY
RIYADH SAUDI ARABIA

الشركة الوطنية لنقل الكهرباء
نقل الكهرباء
National Grid SA

| INDEX | PLANT NO. | DRAWING NUMBER | SHEET NO. SHT | SHEET NO. CONT. | REV. NO. |
|---|---|---|---|---|---|
| - | C421 | CD-323009 | 233 | 234 | 01 |

NG/D2-D (2012/01)
DMS VECTOR NGD200

THIS DRAWING AND THE INFORMATION CONTAINED HEREIN ARE THE SOLE PROPERTY OF NationalGrid SA NO REPRODUCTION IN FULL OR IN PART SHALL BE OBTAINED FROM THIS DOCUMENT WITHOUT THE WRITTEN CONSENT OF ITS OWNER.

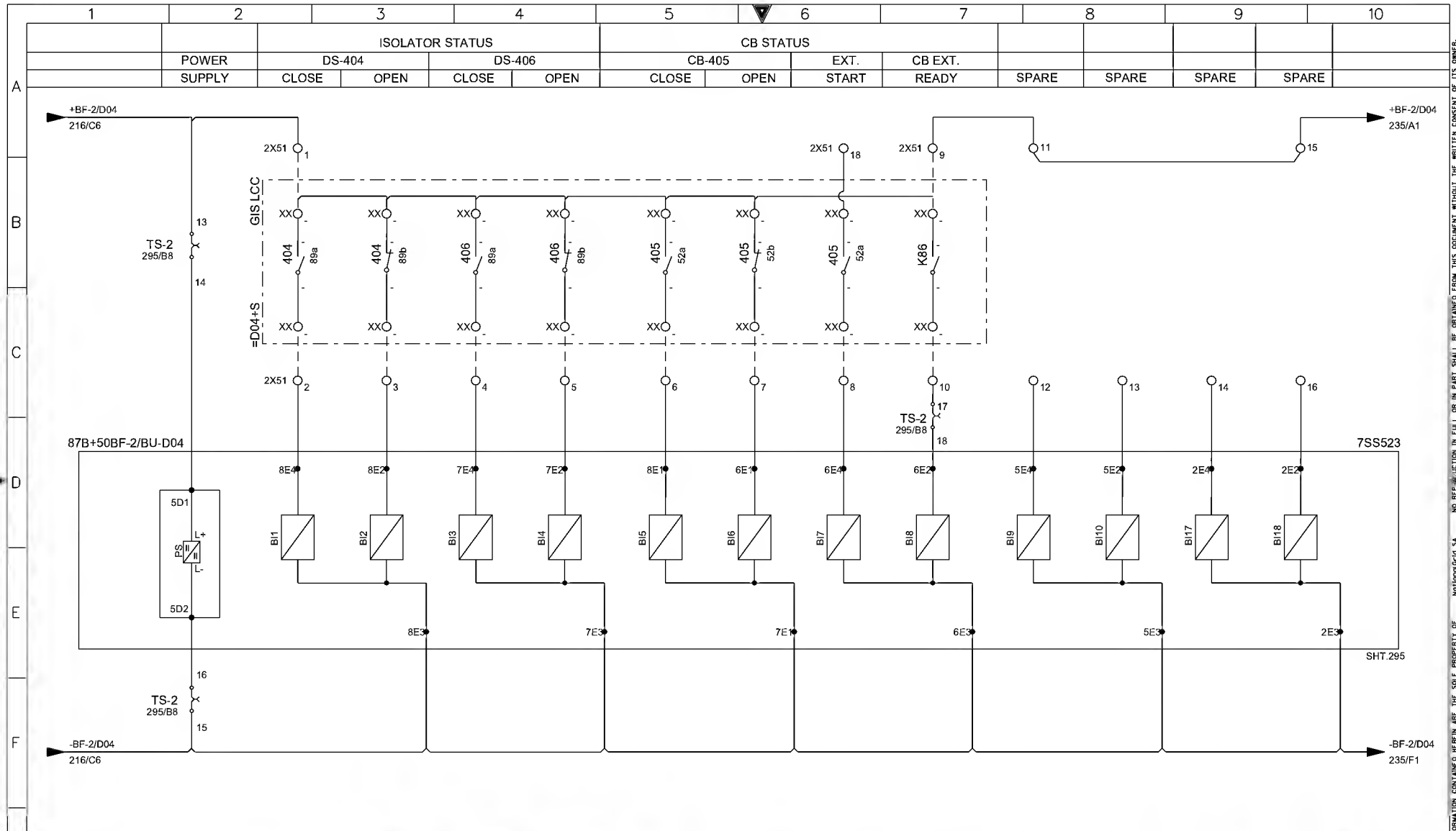


AS-BUILT BY _____ DATE _____ | CONTRACT NO. 11131113/00 | JOB ORDER NO. S-13656

| REV. NO. | DATE | DESCRIPTION |
|---|---|---|
| 01 | 13 49 | FACTORY ASBUILT |
| 00 | 13 05 | FOR APPROVAL |

DRAWN BY RIZ CHECKED BY KVR
DATE STARTED 30.01.2013 DATE COMPLETED _____
DPRG. DEPT. CTPD ENG. DEPT. AUT-PSAC

87B+50BF-2/BU-D04 PROTN. RELAY - BINARY INPUTS
132KV BUSBAR PROTN.MAIN-2 BU PANEL +BBP2-5
S/S 8709 - 132/13.8KV IN AL-KHARJ CITY
RIYADH SAUDI ARABIA

الشركة الوطنية لنقل الكهرباء
نقل الكهرباء National Grid SA

| INDEX | PLANT NO. | DRAWING NUMBER | SHEET NO. SHT | SHEET NO. CONT. | REV. NO. |
|---|---|---|---|---|---|
| - | C421 | CD-323009 | 234 | 235 | 01 |

NG/02-0 (2012/01)
DMS VECTOR NG0200

THIS DRAWING AND THE INFORMATION CONTAINED HEREIN ARE THE SOLE PROPERTY OF NationalGrid SA NO REPRODUCTION IN FULL OR IN PART SHALL BE OBTAINED FROM THIS DOCUMENT WITHOUT THE WRITTEN CONSENT OF ITS OWNER.

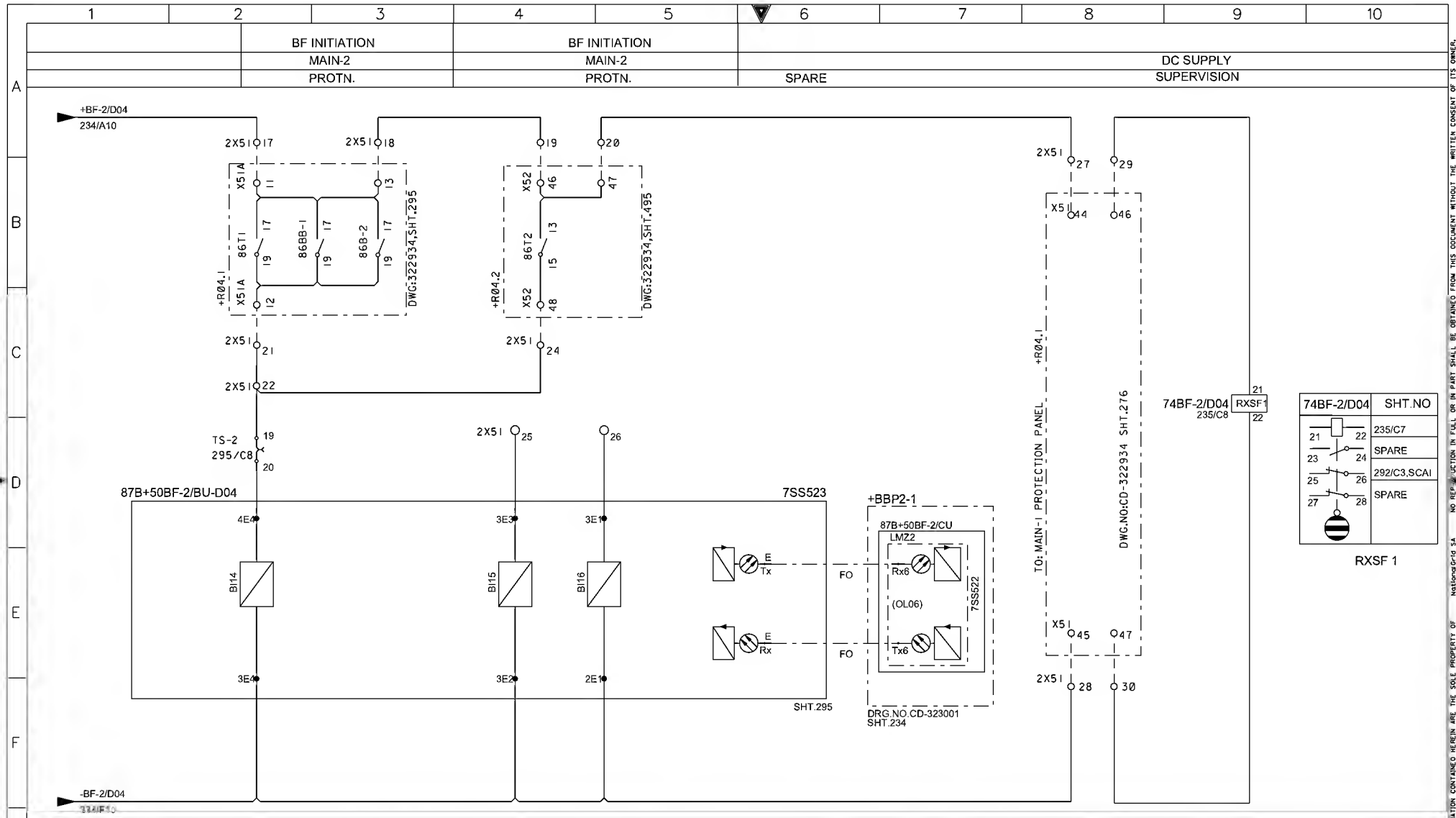


| AS-BUILT BY _____ DATE _____ | CONTRACT NO. 11131113/00 | JOB ORDER NO. S-13656 |
|---|---|---|

| REV. NO. | DATE | DESCRIPTION |
|---|---|---|
| 01 | 13 49 | FACTORY ASBUILT |
| 00 | 13 05 | FOR APPROVAL |

DRAWN BY RIZ CHECKED BY KVR
DATE STARTED 30.01.2013 DATE COMPLETED _____
DPRG. DEPT. CTPD ENG. DEPT. AUT-PSAC

87B+50BF-2/BU-D04 PROTN. RELAY - BINARY INPUTS
132KV BUSBAR PROTN.MAIN-2 BU PANEL +BBP2-5
S/S 8709 - 132/13.8KV IN AL-KHARJ CITY
RIYADH SAUDI ARABIA

الشركة الوطنية لنقل الكهرباء
نقل الكهرباء
National Grid SA

| INDEX | PLANT NO. | DRAWING NUMBER | SHEET NO. SHT | SHEET NO. CONT. | REV. NO. |
|---|---|---|---|---|---|
| - | C421 | CD-323009 | 235 | 236 | 01 |

NG/D2-D (2012/01)
DMS VECTOR NGD200

THIS DRAWING AND THE INFORMATION CONTAINED HEREIN ARE THE SOLE PROPERTY OF NationalGrid SA NO REPRODUCTION IN FULL OR IN PART SHALL BE OBTAINED FROM THIS DOCUMENT WITHOUT THE WRITTEN CONSENT OF ITS OWNER.

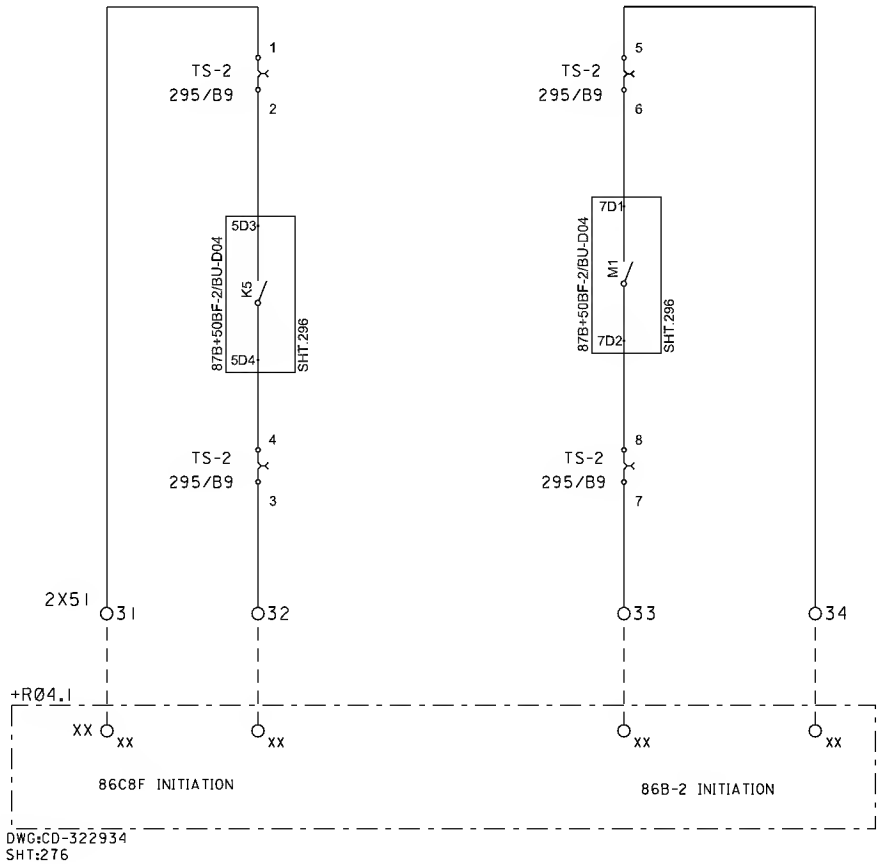


| | | | | |
|---|---|---|---|---|
| AS-BUILT BY _____ DATE _____ | CONTRACT NO. 11131113/00 | JOB ORDER NO. S-13656 | CBF + BUSBAR PROTN.-2 TRIP RELAY CIRCUIT -D04 | الشركة الوطنية لنقل الكهرباء — نقل الكهرباء National Grid SA |
| | | | 132KV BUSBAR PROTN.MAIN-2 BU PANEL +BBP2-5 | |
| 01 / 13 49 / FACTORY ASBUILT | DRAWN BY RIZ | CHECKED BY KVR | S/S 8709 - 132/13.8KV IN AL-KHARJ CITY | |
| 00 / 13 05 / FOR APPROVAL | DATE STARTED 30.01.2013 | DATE COMPLETED _____ | RIYADH SAUDI ARABIA | |
| REV. NO. / DATE / DESCRIPTION | OPRG. DEPT. CTPD | ENG. DEPT. AUT-PSAC | | |

| INDEX | PLANT NO. | DRAWING NUMBER | SHEET NO. SHT | SHEET NO. CONT. | REV. NO. |
|---|---|---|---|---|---|
| - | C421 | CD-323009 | 236 | 237 | 01 |

NG/D2-D (2012/01)

DMS VECTOR NGD200

THIS DRAWING AND THE INFORMATION CONTAINED HEREIN ARE THE SOLE PROPERTY OF NationalGrid SA NO REPRODUCTION IN FULL OR IN PART SHALL BE OBTAINED FROM THIS DOCUMENT WITHOUT THE WRITTEN CONSENT OF ITS OWNER.

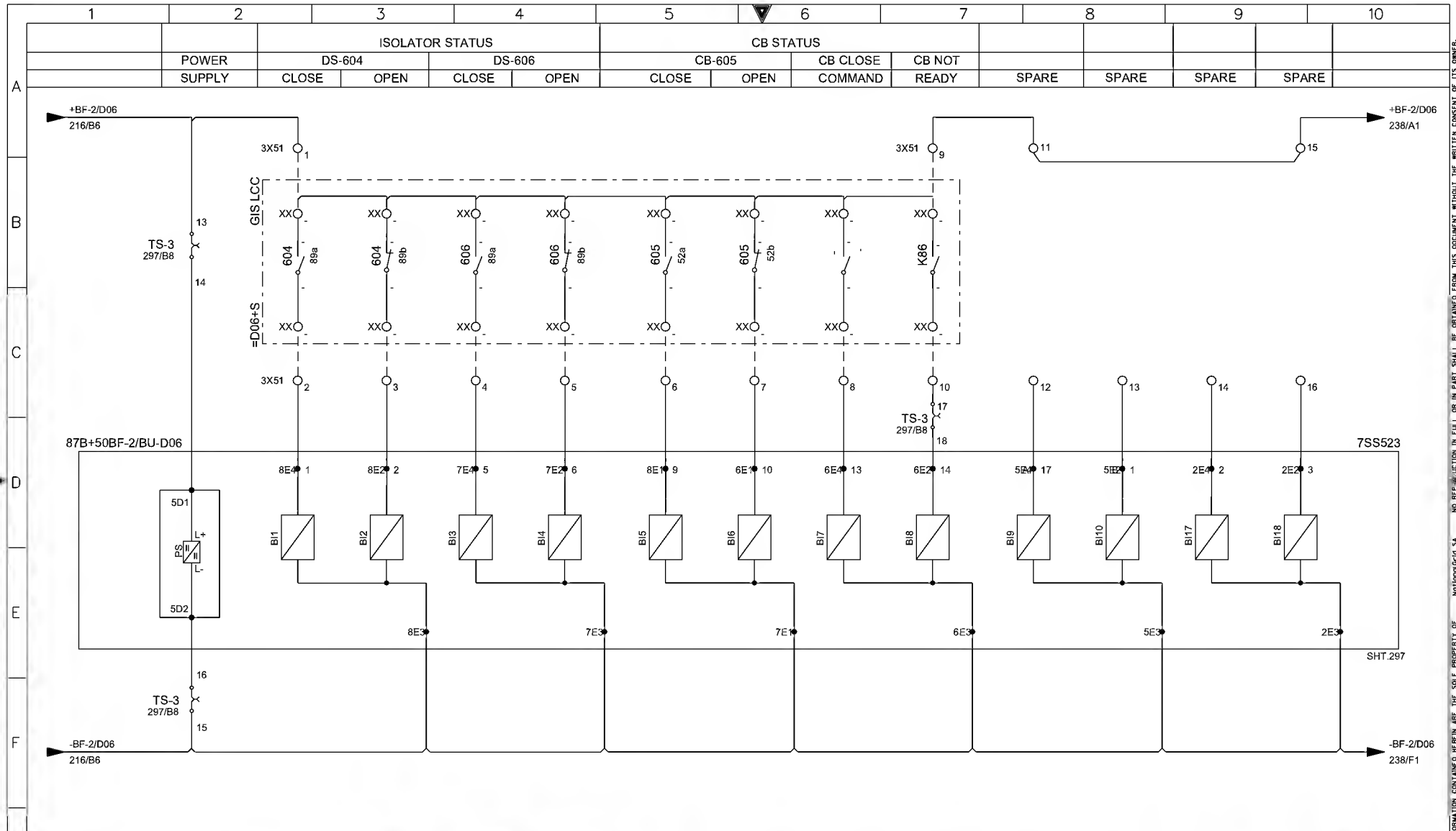


| | | | | | |
|---|---|---|---|---|---|
| AS-BUILT BY _____ DATE _____ | CONTRACT NO. 11131113/00 | JOB ORDER NO. S-13656 | 87B+50BF-2/BU-D06 PROTN. RELAY - BINARY INPUTS | الشركة الوطنية لنقل الكهرباء | نقل الكهرباء National Grid SA |
| | | | 132KV BUSBAR PROTN.MAIN-2 BU PANEL +BBP2-5 | | |
| | | | S/S 8709 - 132/13.8KV IN AL-KHARJ CITY | | |
| | | | RIYADH SAUDI ARABIA | | |

| REV. NO. | DATE | DESCRIPTION |
|---|---|---|
| 01 | 13 49 | FACTORY ASBUILT |
| 00 | 13 05 | FOR APPROVAL |

DRAWN BY RIZ CHECKED BY KVR
DATE STARTED 30.01.2013 DATE COMPLETED _____
DPRG. DEPT. CTPD ENG. DEPT. AUT-PSAC

| INDEX | PLANT NO. | DRAWING NUMBER | SHEET NO. SHT | SHEET NO. CONT. | REV. NO. |
|---|---|---|---|---|---|
| - | C421 | CD-323009 | 237 | 238 | 01 |

NG/02-0 (2012/01)
DMS VECTOR NG0200

THIS DRAWING AND THE INFORMATION CONTAINED HEREIN ARE THE SOLE PROPERTY OF NationalGrid SA NO REPRODUCTION IN FULL OR IN PART SHALL BE OBTAINED FROM THIS DOCUMENT WITHOUT THE WRITTEN CONSENT OF ITS OWNER.

| BF INITIATION | | |
|---|---|---|
| MAIN-1 & 2 | | DC SUPPLY |
| PROTN. | SPARE | SUPERVISION |

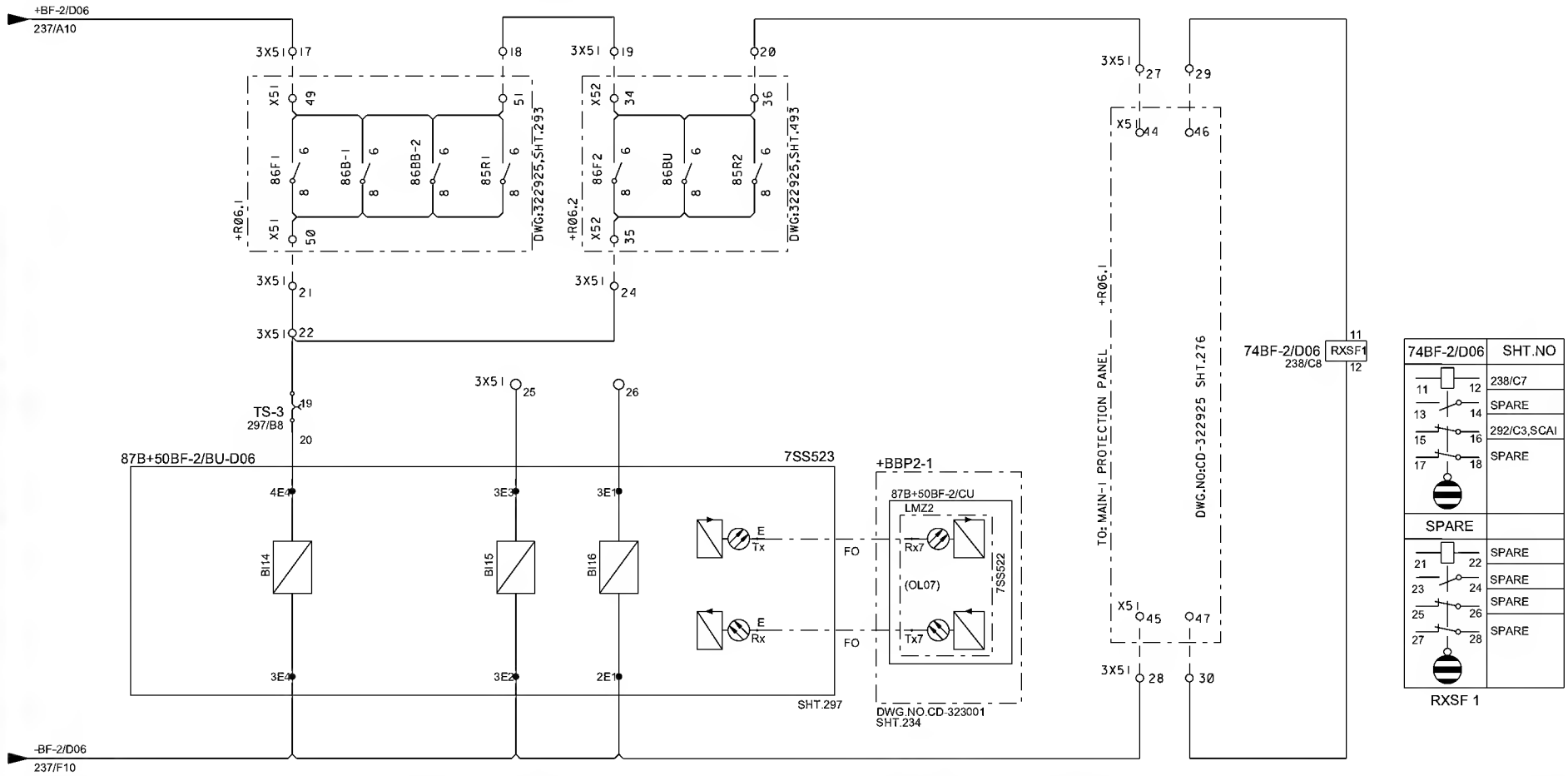


| AS-BUILT BY _____ DATE _____ | CONTRACT NO. 11131113/00 | JOB ORDER NO. S-13656 |
|---|---|---|

| REV. NO. | DATE | DESCRIPTION |
|---|---|---|
| 01 | 13 49 | FACTORY ASBUILT |
| 00 | 13 05 | FOR APPROVAL |

DRAWN BY RIZ CHECKED BY KVR
DATE STARTED 30.01.2013 DATE COMPLETED _____
DPRG. DEPT. CTPD ENG. DEPT. AUT-PSAC

87B+50BF-2/BU-D06 PROTN. RELAY - BINARY INPUTS
132KV BUSBAR PROTN.MAIN-2 BU PANEL +BBP2-5
S/S 8709 - 132/13.8KV IN AL-KHARJ CITY
RIYADH SAUDI ARABIA

الشركة الوطنية لنقل الكهرباء
نقل الكهرباء
National Grid SA

| INDEX | PLANT NO. | DRAWING NUMBER | SHEET NO. SHT | SHEET NO. CONT. | REV. NO. |
|---|---|---|---|---|---|
| - | C421 | CD-323009 | 238 | 239 | 01 |

NG/D2-D (2012/01)
DMS VECTOR NGD200

THIS DRAWING AND THE INFORMATION CONTAINED HEREIN ARE THE SOLE PROPERTY OF NationalGrid SA NO REPRODUCTION IN FULL OR IN PART SHALL BE OBTAINED FROM THIS DOCUMENT WITHOUT THE WRITTEN CONSENT OF ITS OWNER.

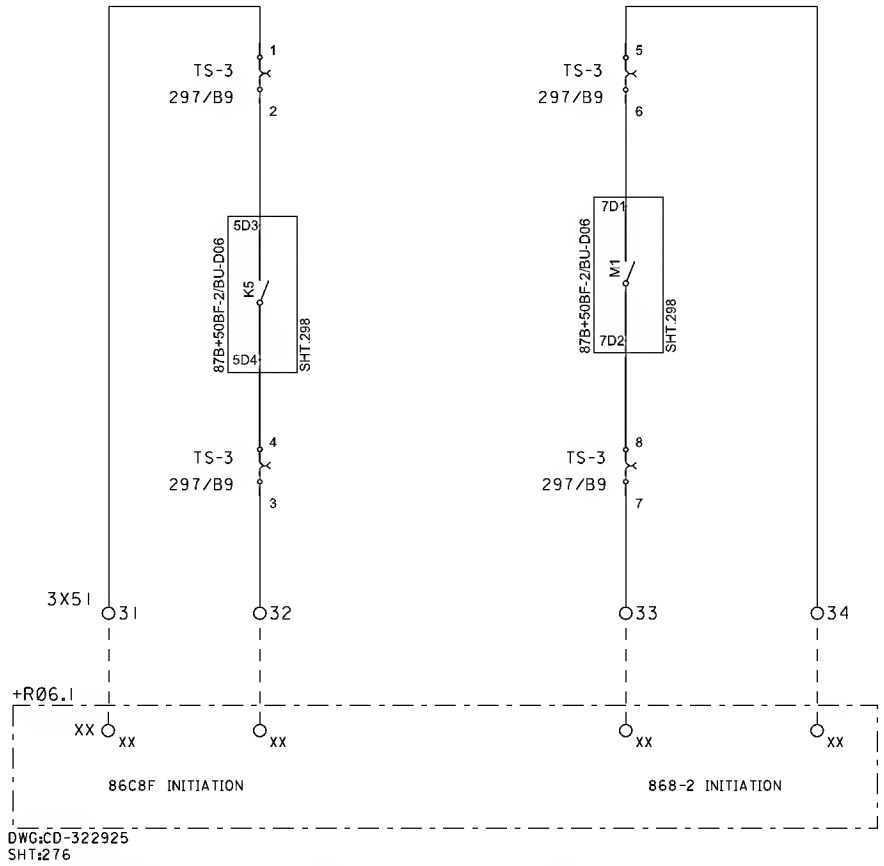


| AS-BUILT BY _____ DATE _____ | CONTRACT NO. 11131113/00 | JOB ORDER NO. S-13656 |
|---|---|---|

| REV. NO. | DATE | DESCRIPTION |
|---|---|---|
| 01 | 13 49 | FACTORY ASBUILT |
| 00 | 13 05 | FOR APPROVAL |

DRAWN BY RIZ CHECKED BY KVR
DATE STARTED 30.01.2013 DATE COMPLETED _____
DPRG. DEPT. CTPD ENG. DEPT. AUT-PSAC

CBF + BUSBAR PROTN.-2 TRIP RELAY CIRCUIT -D06
132KV BUSBAR PROTN.MAIN-2 BU PANEL +BBP2-5
S/S 8709 - 132/13.8KV IN AL-KHARJ CITY
RIYADH SAUDI ARABIA

الشركة الوطنية لنقل الكهرباء
نقل الكهرباء
National Grid SA

| INDEX | PLANT NO. | DRAWING NUMBER | SHEET NO. SHT | SHEET NO. CONT. | REV. NO. |
|---|---|---|---|---|---|
| - | C421 | CD-323009 | 239 | 292 | 01 |

NG/D2-D (2012/01)
DMS VECTOR NGD200

THIS DRAWING AND THE INFORMATION CONTAINED HEREIN ARE THE SOLE PROPERTY OF NationalGrid SA NO REPRODUCTION IN FULL OR IN PART SHALL BE OBTAINED FROM THIS DOCUMENT WITHOUT THE WRITTEN CONSENT OF ITS OWNER.

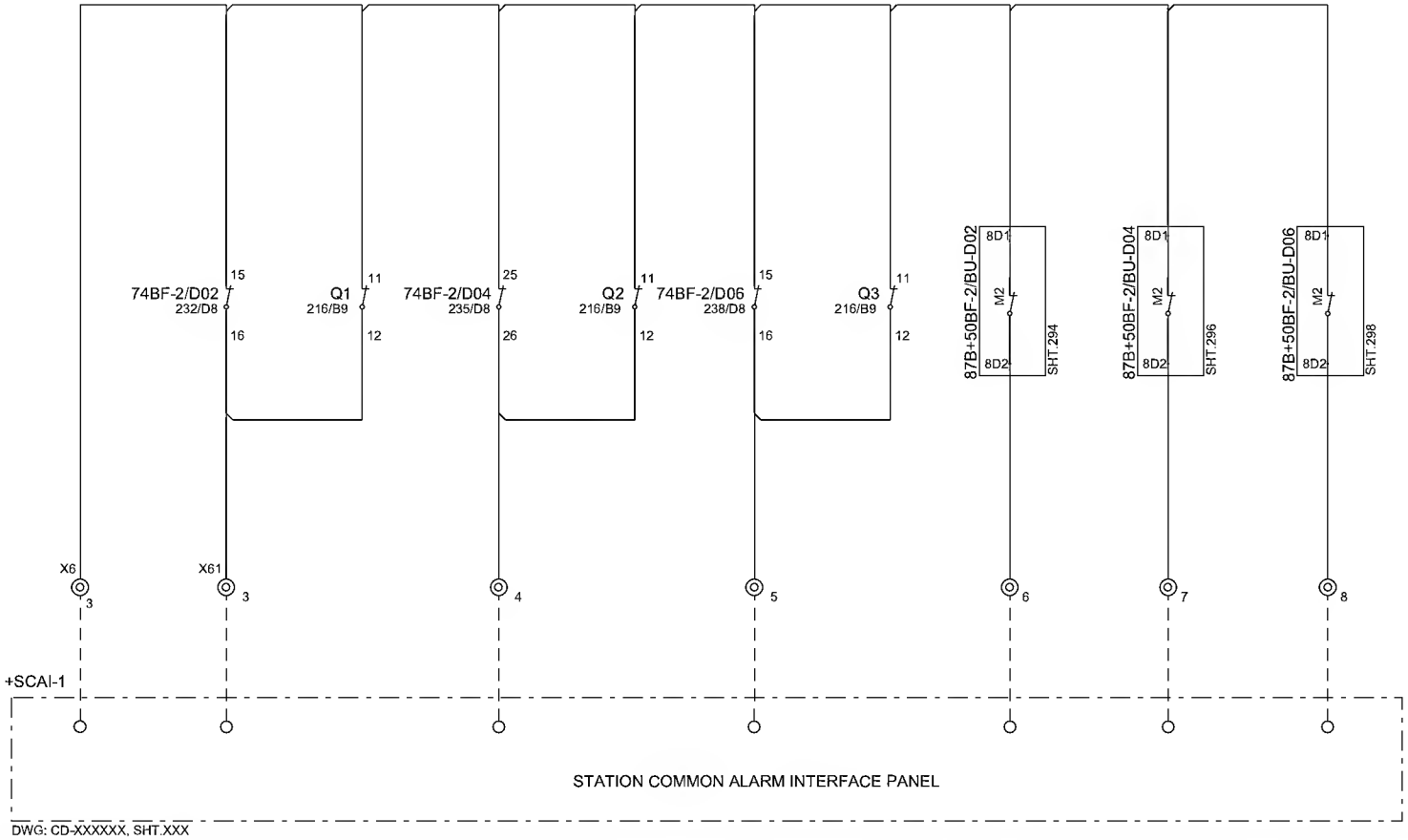


| | | | | |
|---|---|---|---|---|
| AS-BUILT BY _____ DATE _____ | CONTRACT NO. 11131113/00 | JOB ORDER NO. S-13656 | COMMON ALARM CIRCUITS | |
| 01 / 13 49 / FACTORY ASBUILT | DRAWN BY RIZ | CHECKED BY KVR | 132KV BUSBAR PROTN.MAIN-2 BU PANEL +BBP2-5 | |
| 00 / 13 05 / FOR APPROVAL | DATE STARTED 30.01.2013 | DATE COMPLETED _____ | S/S 8709 - 132/13.8KV IN AL-KHARJ CITY | |
| REV. NO. / DATE / DESCRIPTION | OPRG. DEPT. CTPD | ENG. DEPT. AUT-PSAC | RIYADH SAUDI ARABIA | |

الشركة الوطنية لنقل الكهرباء
نقل الكهرباء
National Grid SA

| INDEX | PLANT NO. | DRAWING NUMBER | SHEET NO. SHT | SHEET NO. CONT. | REV. NO. |
|---|---|---|---|---|---|
| - | C421 | CD-323009 | 292 | 293 | 01 |

NG/D2-D (2012/01)
DMS VECTOR NGD200

THIS DRAWING AND THE INFORMATION CONTAINED HEREIN ARE THE SOLE PROPERTY OF NationalGrid SA NO REPRODUCTION IN FULL OR IN PART SHALL BE OBTAINED FROM THIS DOCUMENT WITHOUT THE WRITTEN CONSENT OF ITS OWNER.

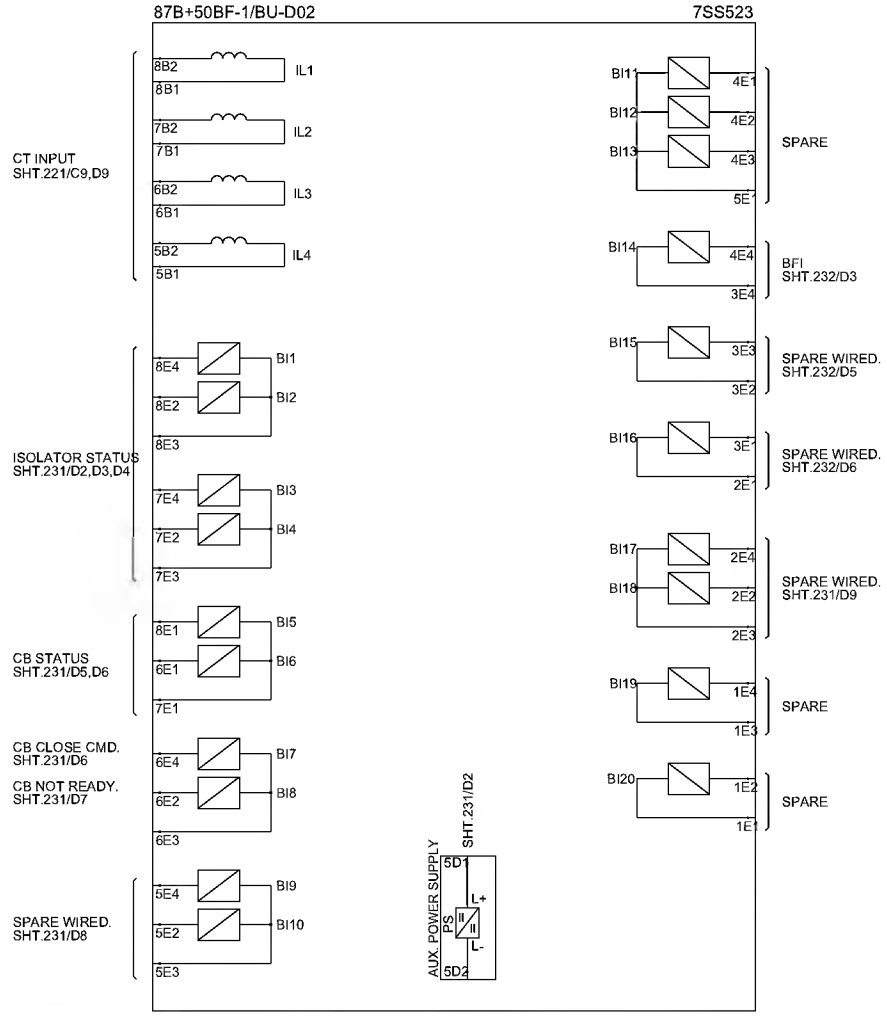


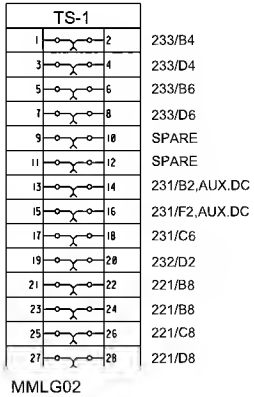


| REV. NO. | DATE | DESCRIPTION |
|---|---|---|
| 01 | 13 49 | FACTORY ASBUILT |
| 00 | 13 05 | FOR APPROVAL |

AS-BUILT BY _____ DATE _____

CONTRACT NO. 11131113/00

JOB ORDER NO. S-13656

DRAWN BY RIZ CHECKED BY KVR

DATE STARTED 30.01.2013 DATE COMPLETED _____

DPRG. DEPT. CTPD ENG. DEPT. AUT-PSAC

87B+50BF-2/BU-D02 INTERNAL DIAGRAM

132KV BUSBAR PROTN.MAIN-2 BU PANEL +BBP2-5

S/S 8709 - 132/13.8KV IN AL-KHARJ CITY

RIYADH SAUDI ARABIA

الشركة الوطنية لنقل الكهرباء

نقل الكهرباء National Grid SA

| INDEX | PLANT NO. | DRAWING NUMBER | SHEET NO. SHT | SHEET NO. CONT. | REV. NO. |
|---|---|---|---|---|---|
| - | C421 | CD-323009 | 293 | 294 | 01 |

NG/D2-D (2012/01)

DMS VECTOR NGD200

THIS DRAWING AND THE INFORMATION CONTAINED HEREIN ARE THE SOLE PROPERTY OF NationalGrid SA NO REPRODUCTION IN FULL OR IN PART SHALL BE OBTAINED FROM THIS DOCUMENT WITHOUT THE WRITTEN CONSENT OF ITS OWNER.

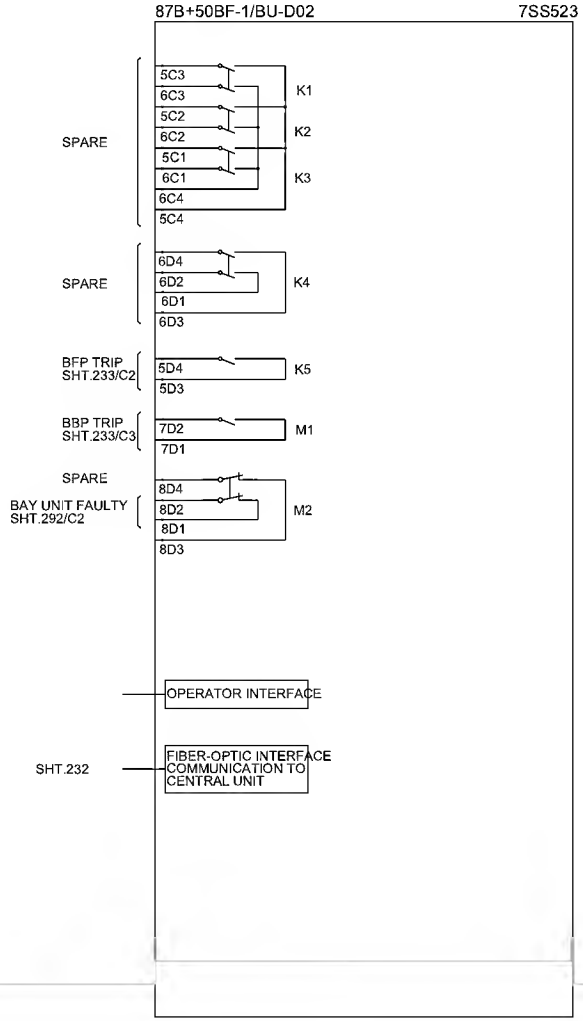


| REV. NO. | DATE | DESCRIPTION |
|---|---|---|
| 01 | 13 49 | FACTORY ASBUILT |
| 00 | 13 05 | FOR APPROVAL |

AS-BUILT BY _____ DATE _____

CONTRACT NO. 11131113/00 | JOB ORDER NO. S-13656

DRAWN BY RIZ CHECKED BY KVR

DATE STARTED 30.01.2013 DATE COMPLETED _____

DPRG. DEPT. CTPD ENG. DEPT. AUT-PSAC

87B+50BF-2/BU-D02 INTERNAL DIAGRAM

132KV BUSBAR PROTN.MAIN-2 BU PANEL +BBP2-5

S/S 8709 - 132/13.8KV IN AL-KHARJ CITY

RIYADH SAUDI ARABIA

الشركة الوطنية لنقل الكهرباء

نقل الكهرباء National Grid SA

| INDEX | PLANT NO. | DRAWING NUMBER | SHEET NO. SHT | SHEET NO. CONT. | REV. NO. |
|---|---|---|---|---|---|
| - | C421 | CD-323009 | 294 | 295 | 01 |

NG/D2-D (2012/01)

DMS VECTOR NGD200

THIS DRAWING AND THE INFORMATION CONTAINED HEREIN ARE THE SOLE PROPERTY OF National Grid SA NO REPRODUCTION IN FULL OR IN PART SHALL BE OBTAINED FROM THIS DOCUMENT WITHOUT THE WRITTEN CONSENT OF ITS OWNER.

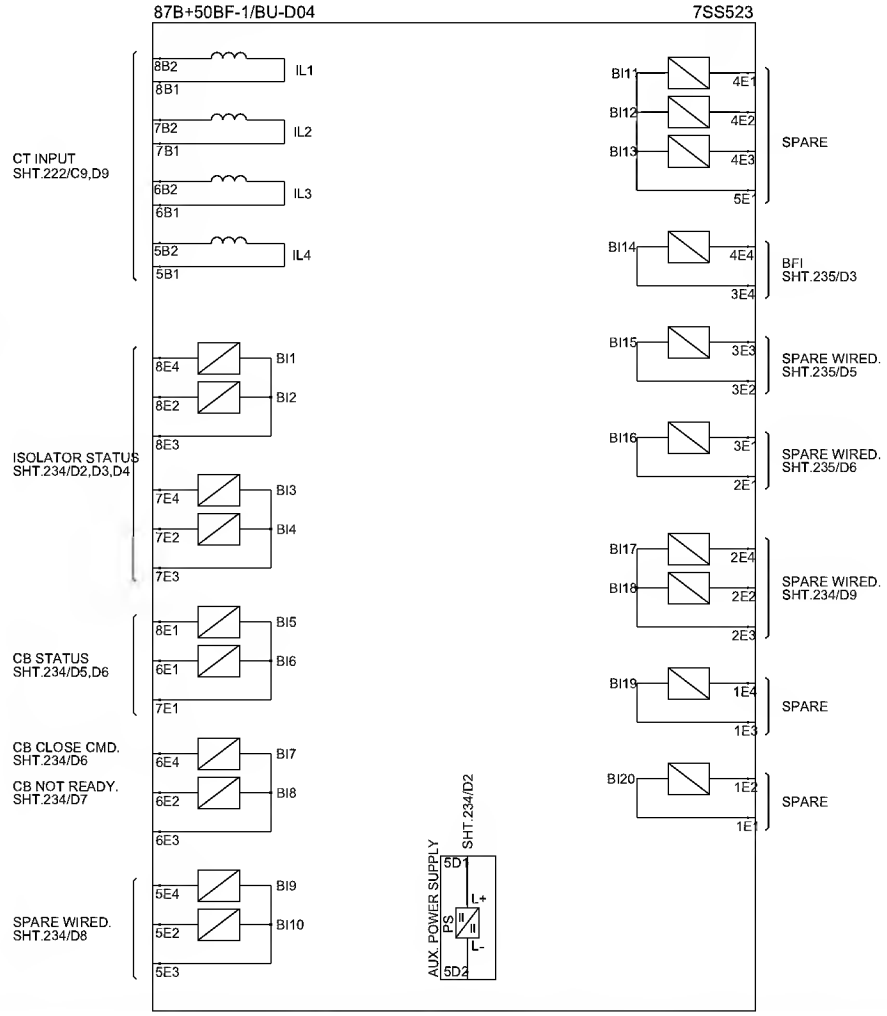


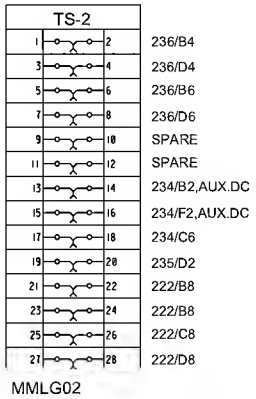


| | | | | |
|---|---|---|---|---|
| AS-BUILT BY _____ DATE _____ | CONTRACT NO. 11131113/00 | JOB ORDER NO. S-13656 | 87B+50BF-2/BU-D04 INTERNAL DIAGRAM | الشركة الوطنية لنقل الكهرباء — نقل الكهرباء National Grid SA |
| | | | 132KV BUSBAR PROTN.MAIN-2 BU PANEL +BBP2-5 | |
| 01 / 13 49 / FACTORY ASBUILT | DRAWN BY RIZ | CHECKED BY KVR | S/S 8709 - 132/13.8KV IN AL-KHARJ CITY | |
| 00 / 13 05 / FOR APPROVAL | DATE STARTED 30.01.2013 | DATE COMPLETED _____ | RIYADH SAUDI ARABIA | |
| REV. NO. / DATE / DESCRIPTION | OPRG. DEPT. CTPD | ENG. DEPT. AUT-PSAC | | |

| INDEX | PLANT NO. | DRAWING NUMBER | SHEET NO. SHT | SHEET NO. CONT. | REV. NO. |
|---|---|---|---|---|---|
| - | C421 | CD-323009 | 295 | 296 | 01 |

NG/D2-D (2012/01)

DMS | VECTOR | NGD200

THIS DRAWING AND THE INFORMATION CONTAINED HEREIN ARE THE SOLE PROPERTY OF NationalGrid SA NO REPRODUCTION IN FULL OR IN PART SHALL BE OBTAINED FROM THIS DOCUMENT WITHOUT THE WRITTEN CONSENT OF ITS OWNER.

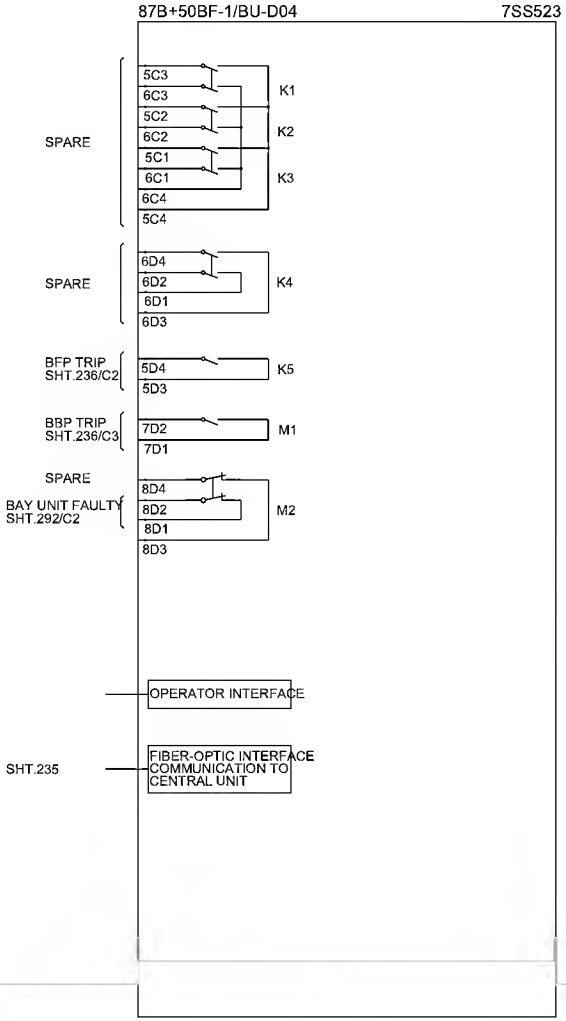


| AS-BUILT BY _____ DATE _____ | CONTRACT NO. 11131113/00 | JOB ORDER NO. S-13656 |
|---|---|---|

| REV. NO. | DATE | DESCRIPTION |
|---|---|---|
| 01 | 13 49 | FACTORY ASBUILT |
| 00 | 13 05 | FOR APPROVAL |

DRAWN BY RIZ CHECKED BY KVR
DATE STARTED 30.01.2013 DATE COMPLETED _____
DPRG. DEPT. CTPD ENG. DEPT. AUT-PSAC

87B+50BF-2/BU-D04 INTERNAL DIAGRAM
132KV BUSBAR PROTN.MAIN-2 BU PANEL +BBP2-5
S/S 8709 - 132/13.8KV IN AL-KHARJ CITY
RIYADH SAUDI ARABIA

الشركة الوطنية لنقل الكهرباء
نقل الكهرباء
National Grid SA

| INDEX | PLANT NO. | DRAWING NUMBER | SHEET NO. SHT | SHEET NO. CONT. | REV. NO. |
|---|---|---|---|---|---|
| - | C421 | CD-323009 | 236 | 297 | 01 |

NG/D2-D (2012/01)
DMS VECTOR NGD200

THIS DRAWING AND THE INFORMATION CONTAINED HEREIN ARE THE SOLE PROPERTY OF National Grid SA NO REPRODUCTION IN FULL OR IN PART SHALL BE OBTAINED FROM THIS DOCUMENT WITHOUT THE WRITTEN CONSENT OF ITS OWNER.

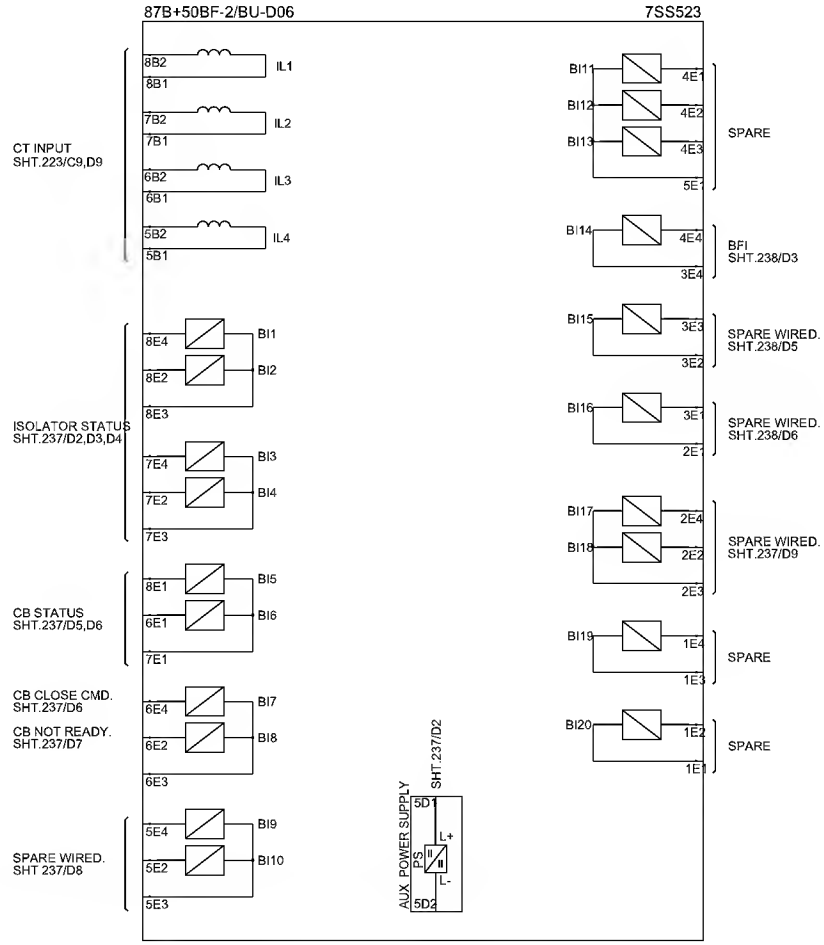


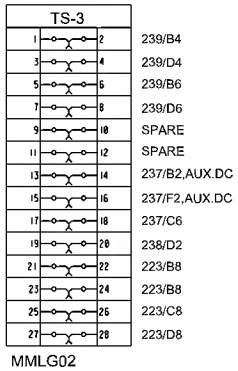


| REV. NO. | DATE | DESCRIPTION |
|---|---|---|
| 01 | 13 49 | FACTORY ASBUILT |
| 00 | 13 05 | FOR APPROVAL |

AS-BUILT BY _____ DATE _____

CONTRACT NO. 11131113/00

JOB ORDER NO. S-13656

DRAWN BY RIZ CHECKED BY KVR

DATE STARTED 30.01.2013 DATE COMPLETED _____

OPRG. DEPT. CTPD ENG. DEPT. AUT-PSAC

87B+50BF-2/BU-D06 INTERNAL DIAGRAM

132KV BUSBAR PROTN.MAIN-2 BU PANEL +BBP2-5

S/S 8709 - 132/13.8KV IN AL-KHARJ CITY

RIYADH SAUDI ARABIA

الشركة الوطنية لنقل الكهرباء

نقل الكهرباء National Grid SA

| INDEX | PLANT NO. | DRAWING NUMBER | SHEET NO. SHT | SHEET NO. CONT. | REV. NO. |
|---|---|---|---|---|---|
| - | C421 | CD-323009 | 297 | 298 | 01 |

NG/D2-D (2012/01)

DMS VECTOR NGD200

THIS DRAWING AND THE INFORMATION CONTAINED HEREIN ARE THE SOLE PROPERTY OF NationalGrid SA NO REPRODUCTION IN FULL OR IN PART SHALL BE OBTAINED FROM THIS DOCUMENT WITHOUT THE WRITTEN CONSENT OF ITS OWNER.

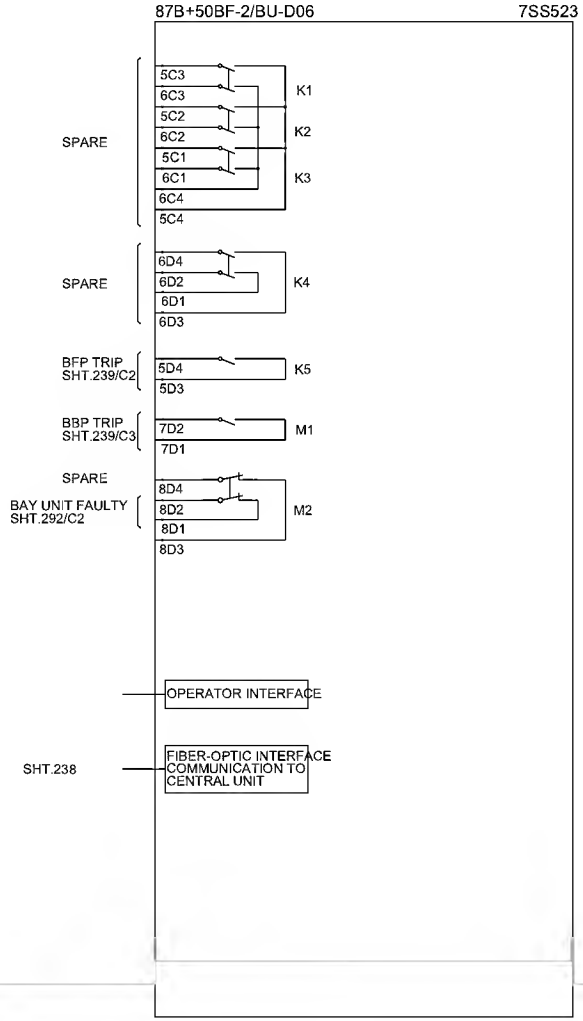


AS-BUILT BY _____ DATE _____

CONTRACT NO. 11131113/00

JOB ORDER NO. S-13656

| REV. NO. | DATE | DESCRIPTION |
|---|---|---|
| 01 | 13 49 | FACTORY ASBUILT |
| 00 | 13 05 | FOR APPROVAL |

DRAWN BY RIZ CHECKED BY KVR

DATE STARTED 30.01.2013 DATE COMPLETED _____

DPRG. DEPT. CTPD ENG. DEPT. AUT-PSAC

87B+50BF-2/BU-D06 INTERNAL DIAGRAM

132KV BUSBAR PROTN.MAIN-2 BU PANEL +BBP2-5

S/S 8709 - 132/13.8KV IN AL-KHARJ CITY

RIYADH SAUDI ARABIA

الشركة الوطنية لنقل الكهرباء

نقل الكهرباء National Grid SA

| INDEX | PLANT NO. | DRAWING NUMBER | SHEET NO. SHT | SHEET NO. CONT. | REV. NO. |
|---|---|---|---|---|---|
| - | C421 | CD-323009 | 298 | 301 | 01 |

NG/D2-D (2012/01)

DMS VECTOR NGD200

THIS DRAWING AND THE INFORMATION CONTAINED HEREIN ARE THE SOLE PROPERTY OF NationalGrid SA NO REPRODUCTION IN FULL OR IN PART SHALL BE OBTAINED FROM THIS DOCUMENT WITHOUT THE WRITTEN CONSENT OF ITS OWNER.

| REFERENCE | 1X1 CT CKT. |
|---|---|
| 221/B7 | 1 |
| 221/B7 | 2 |
| 221/C7 | 3 |
| 221/C7 | 4 |
| 221/C7 | 5 |
| 221/C7 | 6 |
| 221/C7 | 7 |
| 221/D7 | 8 |
| 221/D7 | 9 |
| SPARE | 10 |

| REFERENCE | 2X1 CT CKT. |
|---|---|
| 222/B7 | 1 |
| 222/B7 | 2 |
| 222/C7 | 3 |
| 222/C7 | 4 |
| 222/C7 | 5 |
| 222/C7 | 6 |
| 222/C7 | 7 |
| 222/D7 | 8 |
| 222/D7 | 9 |
| SPARE | 10 |

| REFERENCE | 3X1 CT CKT. |
|---|---|
| 223/B7 | 1 |
| 223/B7 | 2 |
| 223/C7 | 3 |
| 223/C7 | 4 |
| 223/C7 | 5 |
| 223/C7 | 6 |
| 223/C7 | 7 |
| 223/D7 | 8 |
| 223/D7 | 9 |
| SPARE | 10 |

| REFERENCE | 1X51 CON & PROTN CKTS. |
|---|---|
| 231/A2 | 1 |
| 231/C2 | 2 |
| 231/C3 | 3 |
| 231/C4 | 4 |
| 231/C4 | 5 |
| 231/C5 | 6 |
| 231/C6 | 7 |
| 231/C6 | 8 |
| 231/A7 | 9 |
| 231/C7 | 10 |
| 231/C8 | 11 |
| 231/C8 | 12 |
| 231/C8 | 13 |
| 231/C9 | 14 |
| 231/A9 | 15 |
| 231/C1D | 16 |
| 232/A2 | 17 |
| 232/A3 | 18 |
| 232/A4 | 19 |
| 232/A5 | 20 |
| 232/C2 | 21 |
| 232/C2 | 22 |
| SPARE | 23 |
| 232/C4 | 24 |
| 232/D4 | 25 |
| 232/D4 | 26 |
| 232/A8 | 27 |
| 232/E8 | 28 |
| 232/A8 | 29 |
| 232/E8 | 30 |
| 233/E4 | 31 |
| 233/E4 | 32 |
| 233/E6 | 33 |
| 233/E7 | 34 |
| SPARE | 35 |
| SPARE | 36 |
| SPARE | 37 |
| SPARE | 38 |
| SPARE | 39 |
| SPARE | 40 |

| REFERENCE | 2X51 CON & PROTN CKTS. |
|---|---|
| 234/A2 | 1 |
| 234/C2 | 2 |
| 234/C3 | 3 |
| 234/C4 | 4 |
| 234/C4 | 5 |
| 234/C5 | 6 |
| 234/C6 | 7 |
| 234/C6 | 8 |
| 234/A7 | 9 |
| 234/C7 | 10 |
| 234/C8 | 11 |
| 234/C8 | 12 |
| 234/C8 | 13 |
| 234/C9 | 14 |
| 234/A9 | 15 |
| 234/C1D | 16 |
| 23S/A2 | 17 |
| 23S/A3 | 18 |
| 23S/A4 | 19 |
| 23S/A5 | 20 |
| 23S/C2 | 21 |
| 23S/C2 | 22 |
| SPARE | 23 |
| 23S/C4 | 24 |
| 23S/D4 | 25 |
| 23S/D4 | 26 |
| 23S/A8 | 27 |
| 23S/E8 | 28 |
| 23S/A8 | 29 |
| 23S/E8 | 30 |
| 236/E4 | 31 |
| 236/E4 | 32 |
| 236/E6 | 33 |
| 236/E7 | 34 |
| SPARE | 35 |
| SPARE | 36 |
| SPARE | 37 |
| SPARE | 38 |
| SPARE | 39 |
| SPARE | 40 |

| REFERENCE | 3X51 CON & PROTN CKTS. |
|---|---|
| 237/A2 | 1 |
| 237/C2 | 2 |
| 237/C3 | 3 |
| 237/C4 | 4 |
| 237/C4 | 5 |
| 237/C5 | 6 |
| 237/C6 | 7 |
| 237/C6 | 8 |
| 237/A7 | 9 |
| 237/C7 | 10 |
| 237/C8 | 11 |
| 237/C8 | 12 |
| 237/C8 | 13 |
| 237/C9 | 14 |
| 237/A9 | 15 |
| 237/C10 | 16 |
| 238/A2 | 17 |
| 238/A3 | 18 |
| 238/A4 | 19 |
| 238/A5 | 20 |
| 238/C2 | 21 |
| 238/C2 | 22 |
| SPARE | 23 |
| 238/C4 | 24 |
| 238/D4 | 25 |
| 238/D4 | 26 |
| 238/A8 | 27 |
| 238/E8 | 28 |
| 238/A8 | 29 |
| 238/E8 | 30 |
| 239/E4 | 31 |
| 239/E4 | 32 |
| 239/E6 | 33 |
| 239/E7 | 34 |
| SPARE | 35 |
| SPARE | 36 |
| SPARE | 37 |
| SPARE | 38 |
| SPARE | 39 |
| SPARE | 40 |

| REFERENCE | X61 ALM. CKT. |
|---|---|
| 212/E5 | 1 |
| 212/E5 | 2 |
| 292/E3 | 3 |
| 292/E4 | 4 |
| 292/E6 | 5 |
| 292/E7 | 6 |
| 292/E8 | 7 |
| 292/E8 | 8 |
| 292/E9 | 9 |
| SPARE | 10 |
| SPARE | 11 |
| SPARE | 12 |
| SPARE | 13 |
| SPARE | 14 |
| SPARE | 15 |

| REFERENCE | X4 DC CKTS. |
|---|---|
| 216/B3 | 1 |
| 216/B3 | 2 |
| 216/D3 | 3 |
| 216/D3 | 4 |
| SPARE | 5 |
| SPARE | 6 |
| SPARE | 7 |
| SPARE | 8 |
| SPARE | 9 |
| SPARE | 10 |

| REFERENCE | X3 AC CKT. |
|---|---|
| 211/A3 | 1 |
| 211/A7 | 2 |
| 211/A3 | 3 |
| 211/A7 | 4 |
| 211/B3 | 5 |
| 211/B7 | 6 |
| 211/B3 | 7 |
| 211/B7 | 8 |
| SPARE | 9 |
| SPARE | 10 |

| REFERENCE | XTJ T.JACK |
|---|---|
| 211/C3 | 1 |
| 211/D3 | 2 |
| 211/D3 | 3 |
| 211/D3 | 4 |
| SPARE | 5 |

| REFERENCE | XSH SPACE HEATER |
|---|---|
| 211/E6 | 1 |
| 211/F6 | 2 |
| SPARE | 3 |

| REFERENCE | X6 ALM. CKT. |
|---|---|
| 212/C5 | 1 |
| 212/C5 | 2 |
| 292/E2 | 3 |
| SPARE | 4 |
| SPARE | 5 |

AS-BUILT BY _____ DATE _____ | CONTRACT NO. 11131113/00 | JOB ORDER NO. S-13656

| REV. NO. | DATE | DESCRIPTION |
|---|---|---|
| 01 | 13 49 | FACTORY ASBUILT |
| 00 | 13 05 | FOR APPROVAL |

DRAWN BY RIZ CHECKED BY KVR
DATE STARTED 30.01.2013 DATE COMPLETED _____
ORGN. DEPT. CTPD ENG. DEPT. AUT-PSAC

TERMINAL BLOCKS +BB2-5
132KV BUSBAR PROTN.MAIN-2 BU PANEL +BBP2-5
S/S 8709 - 132/13.8KV IN AL-KHARJ CITY
RIYADH SAUDI ARABIA

الشركة الوطنية لنقل الكهرباء
نقل الكهرباء
National Grid SA

| INDEX | PLANT NO. | DRAWING NUMBER | SHEET NO. SHT | SHEET NO. CONT. | REV. NO. |
|---|---|---|---|---|---|
| - | C421 | CD-323009 | 301 | NIL | 01 |

NG/D2-D (2012/01)
DMS VECTOR NGD200

THIS DRAWING AND THE INFORMATION CONTAINED HEREIN ARE THE SOLE PROPERTY OF National Grid SA NO REPRODUCTION IN FULL OR IN PART SHALL BE OBTAINED FROM THIS DOCUMENT WITHOUT THE WRITTEN CONSENT OF ITS OWNER.